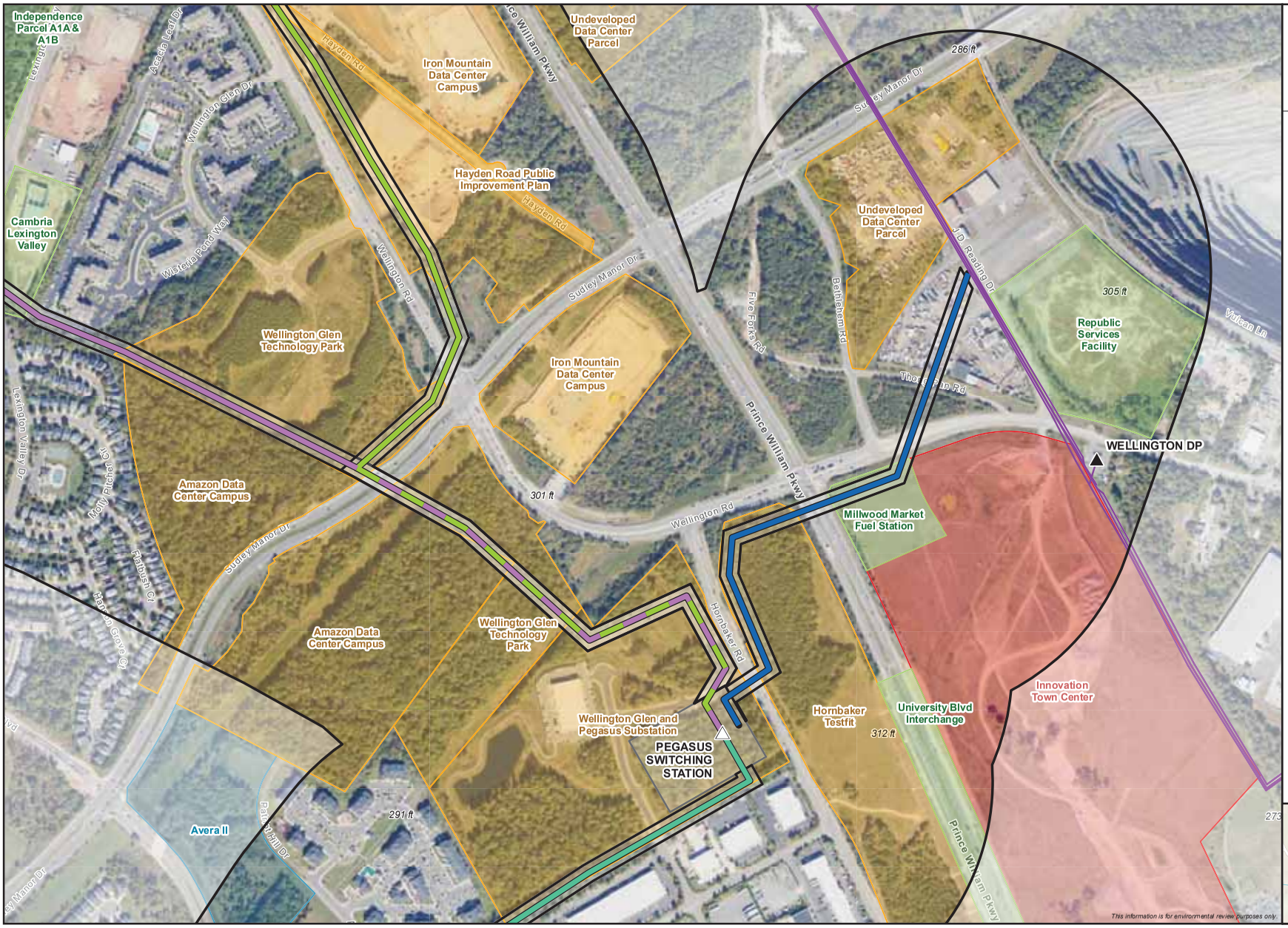

Dominion Energy

Figure 5.1-4

Planned Developments within 0.25 Miles of Routes
Hornbaker 230 kV Line Loop Project
Dominion Energy
Prince William County, Virginia
Page 3 of 6

- Existing Substation
- Proposed Switching Station
- Existing Dominion Transmission Line
- Wellington – Pegasus Route 1
- Pegasus – Hornbaker Route 1
- Devlin – Pegasus Route 1
- Devlin – Pegasus Route 2
- Pegasus Switching Station Boundary
- 0.25-Mile Buffer

Planned Development

- Commercial
- Data Center
- Mixed-Use
- Residential

0 250 500
Feet
1:6,000

ERM

N W E S

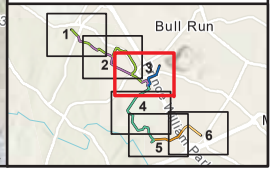

Dominion Energy

Figure 5.1-4

Planned Developments within 0.25 Miles of Routes
Hornbaker 230 kV Line Loop Project
Dominion Energy
Prince William County, Virginia
Page 4 of 6

Pegasus – Hornbaker Route 1
0.25-Mile Buffer

Planned Development
- Commercial
- Data Center
- Mixed-Use
- Residential

0 250 500
Feet
1:6,000

ERM

N W E S

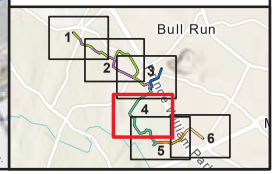

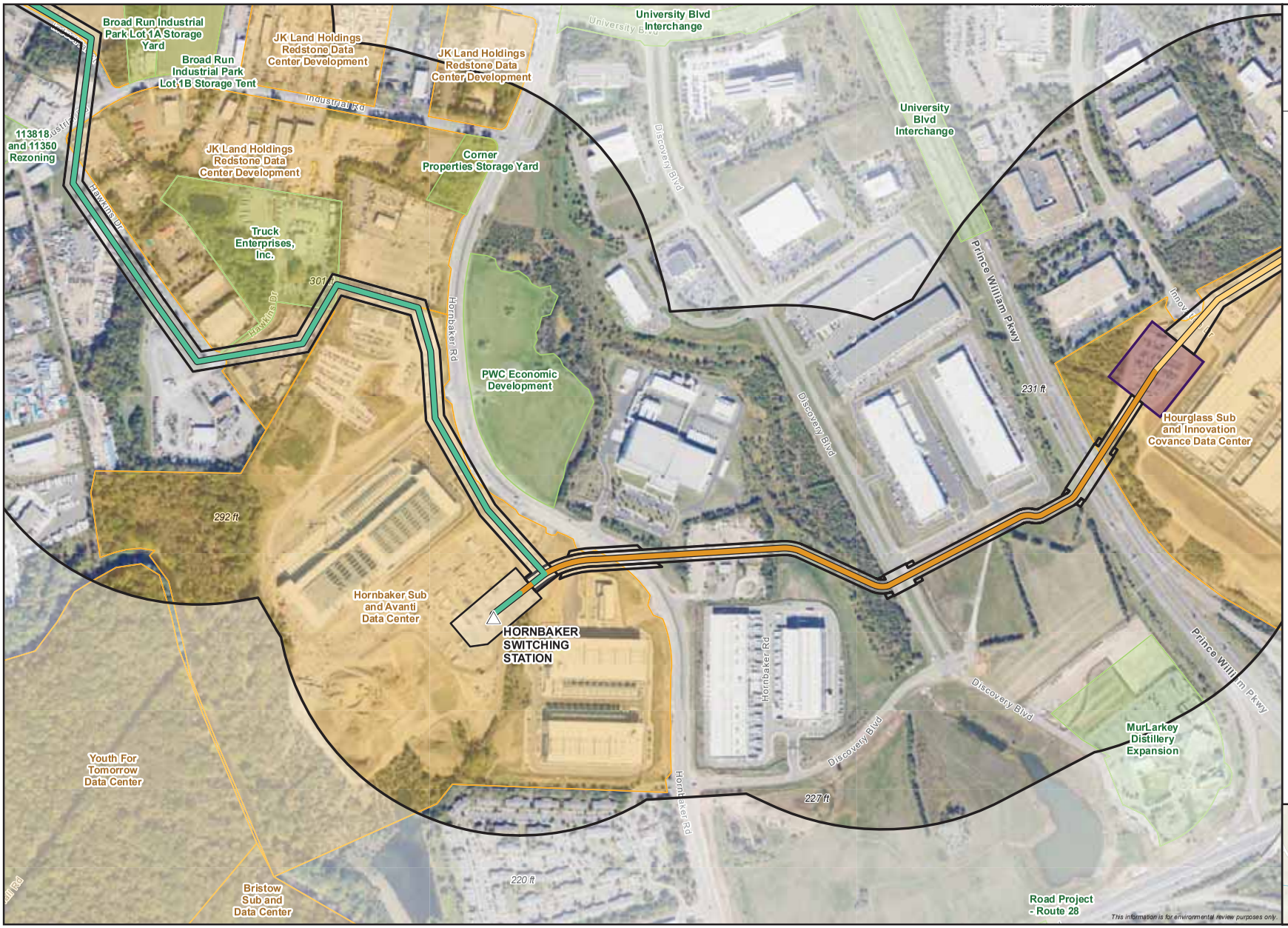

Dominion Energy

Figure 5.1-4
Planned Developments within 0.25 Miles of Routes
Hornbaker 230 kV Line Loop Project
Dominion Energy
Prince William County, Virginia
Page 5 of 6

- Proposed Switching Station
- Pegasus – Hornbaker Route 1
- Hourglass – Hornbaker Route 1 (Overhead)
- Hourglass – Hornbaker Route 1 (Underground)
- Proposed Transition Station
- Proposed Hornbaker Switching Station Boundary
- 0.25-Mile Buffer

Planned Development
- Commercial
- Data Center

0 250 500
Feet
1:6,000

ERM

N W E S

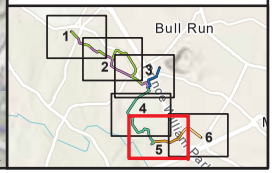

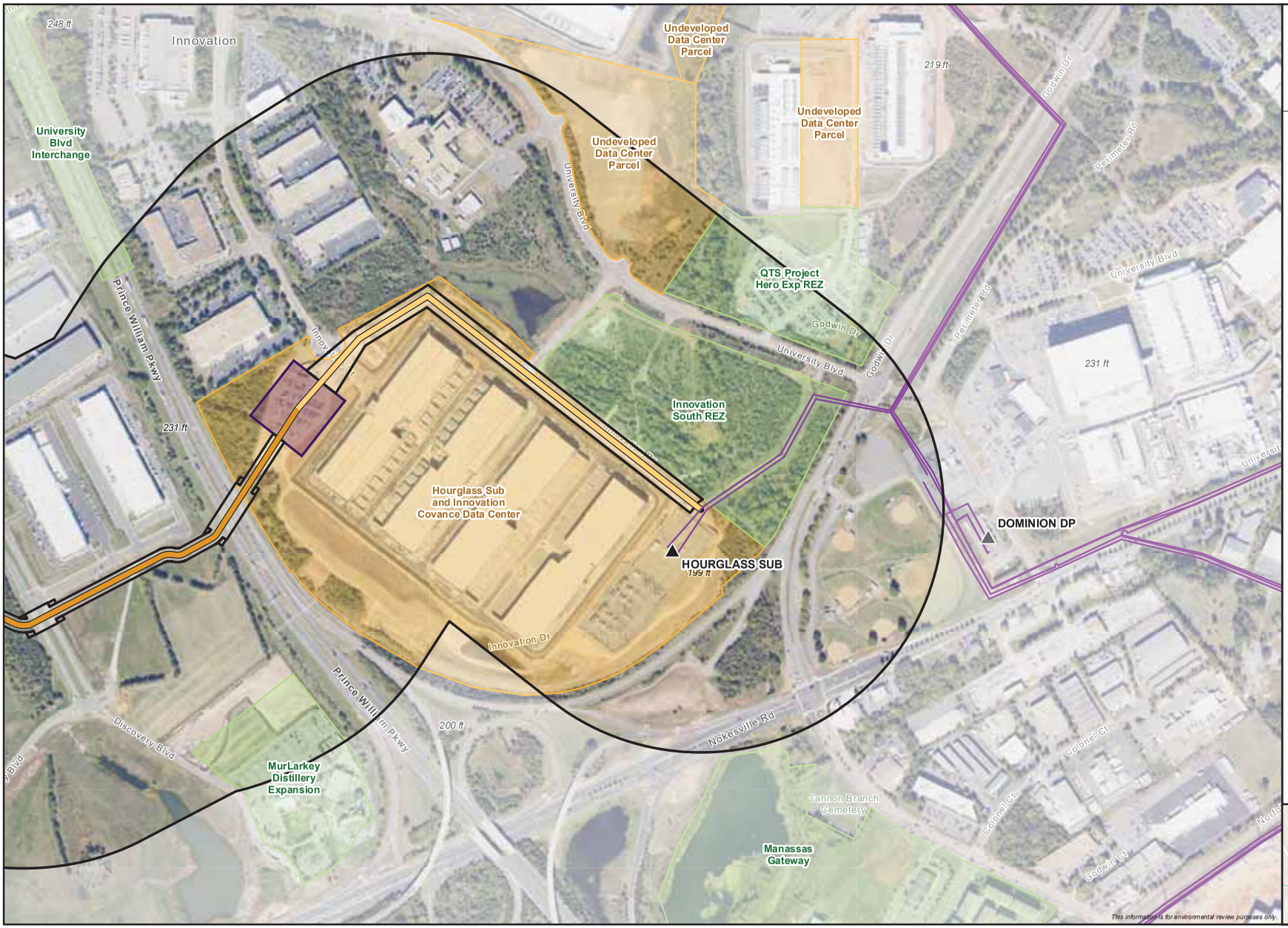

Dominion Energy

Figure 5.1-4

Planned Developments within 0.25 Miles of Routes
Hornbaker 230 kV Line Loop Project
Dominion Energy
Prince William County, Virginia
Page 6 of 6

- Existing Substation
- Existing Dominion Transmission Line
- Hourglass – Hornbaker Route 1 (Overhead)
- Hourglass – Hornbaker Route 1 (Underground)
- Proposed Transition Station
- 0.25-Mile Buffer

Planned Development

- Commercial
- Data Center

0 250 500
Feet

1:6,000

ERM

N W E S

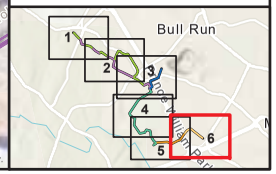

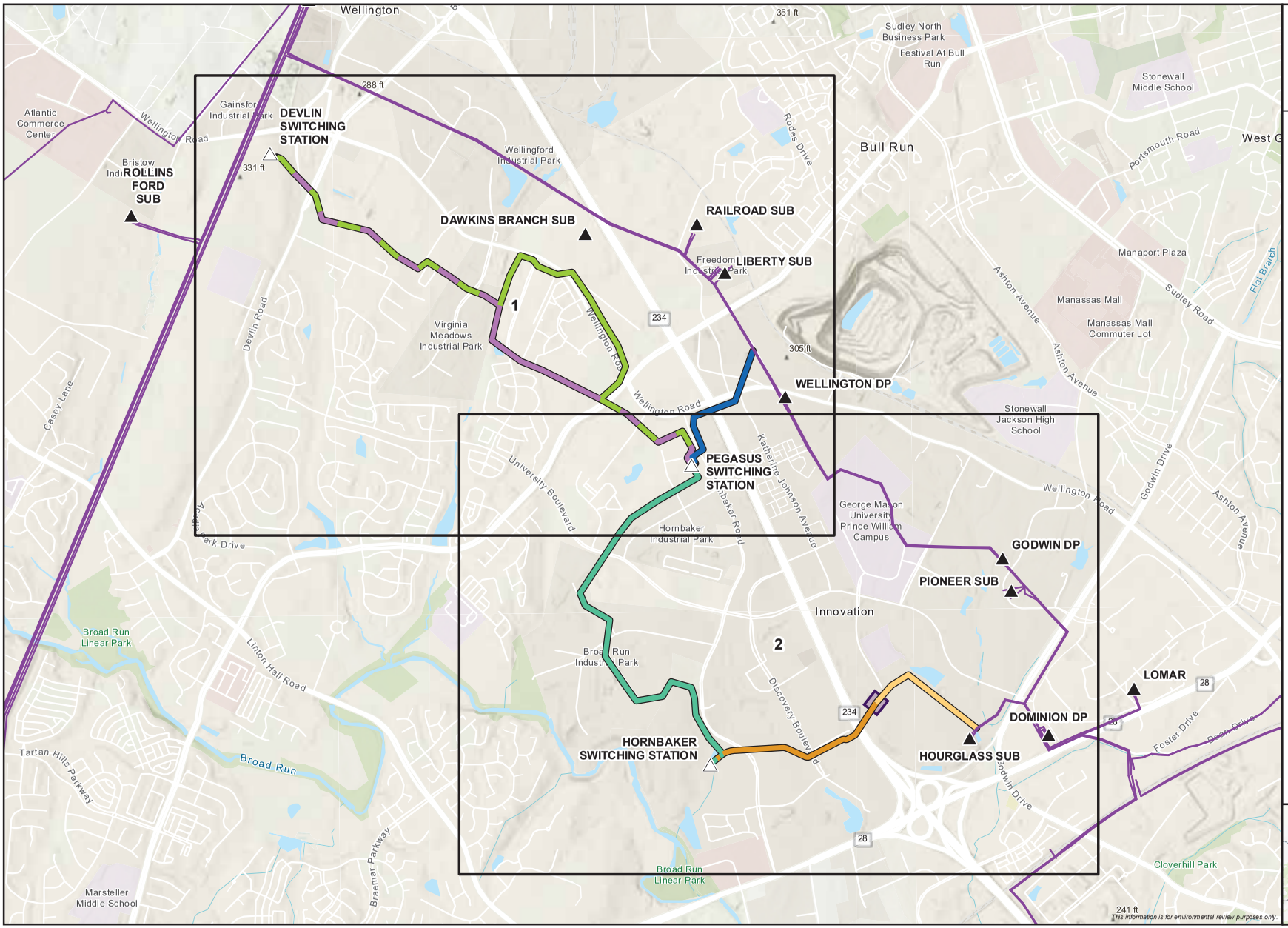

Dominion Energy

Figure 5.1-5

Recreation Areas within 0.25 Miles of Routes Index
Hornbaker 230 kV Line Loop Project
Dominion Energy
Prince William County, Virginia
Page 0 of 2

- Existing Substation
- Proposed Switching Station
- Existing Dominion Transmission Line
- Wellington – Pegasus Route 1
- Pegasus – Hornbaker Route 1
- Hourglass – Hornbaker Route 1 (Overhead)
- Hourglass – Hornbaker Route 1 (Underground)
- Proposed Transition Station
- Devlin – Pegasus Route 1
- Devlin – Pegasus Route 2
- Index Page

0 1,000 2,000
Feet
1:24,000

ERM

N W E S

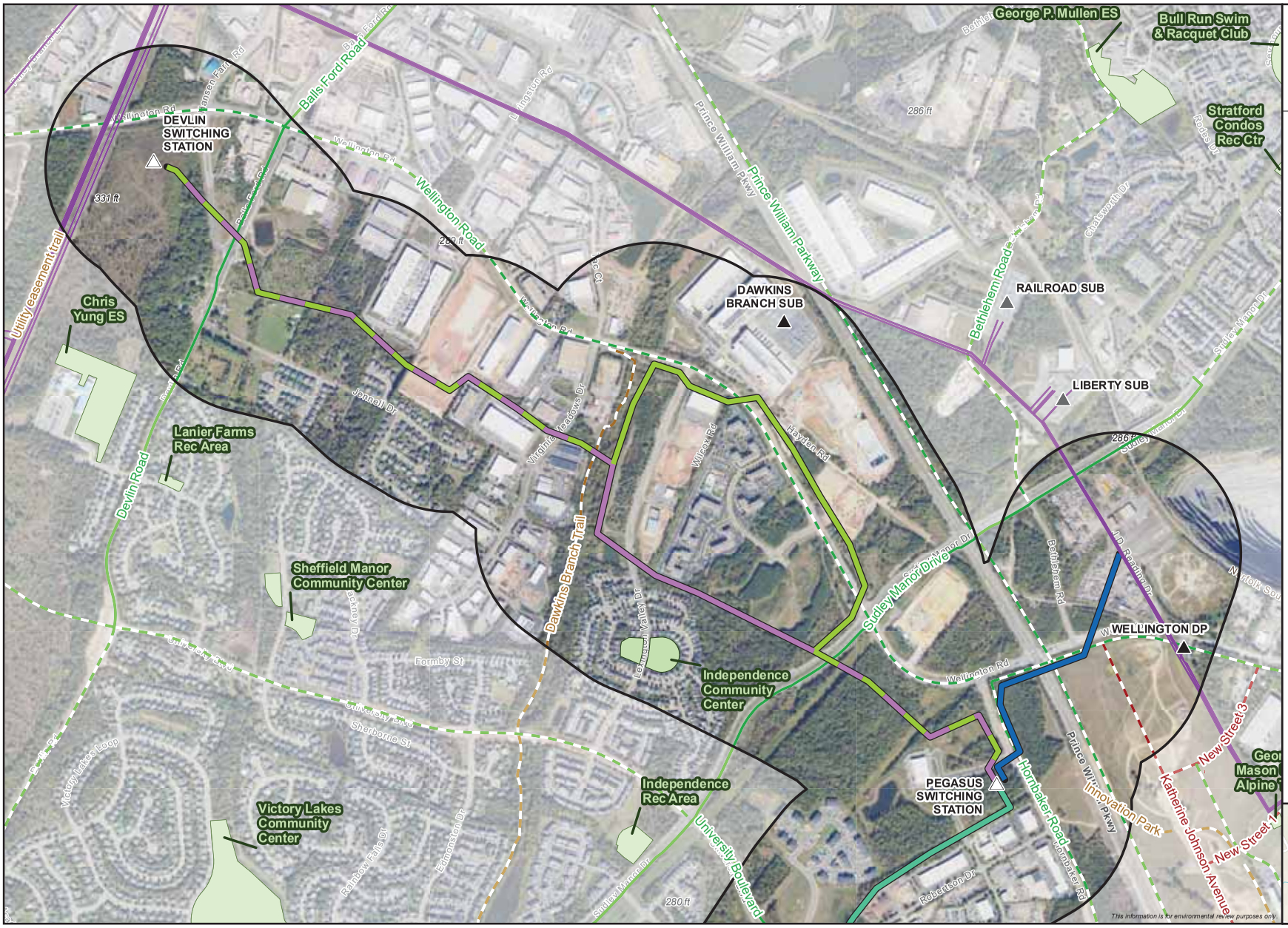

Dominion Energy

Figure 5.1-5

Recreational Areas within 0.25 Miles of Routes Hornbaker 230 kV Line Loop Project

Dominion Energy

Prince William County, Virginia

Page 1 of 2

- Existing Substation
- Proposed Switching Station
- Existing Dominion Transmission Line
- Wellington – Pegasus Route 1
- Pegasus – Hornbaker Route 1
- Devlin – Pegasus Route 1
- Devlin – Pegasus Route 2
- Park

Trail Classification, Status

- Shared Use, Existing
- Shared Use, Planned
- Bicycle Lanes, Planned
- Park, Planned
- 0.25-Mile Buffer

0 500 1,000 Feet

1:12,000

ERM

N W E S

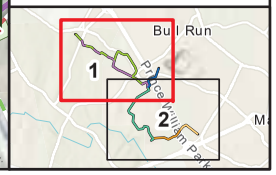

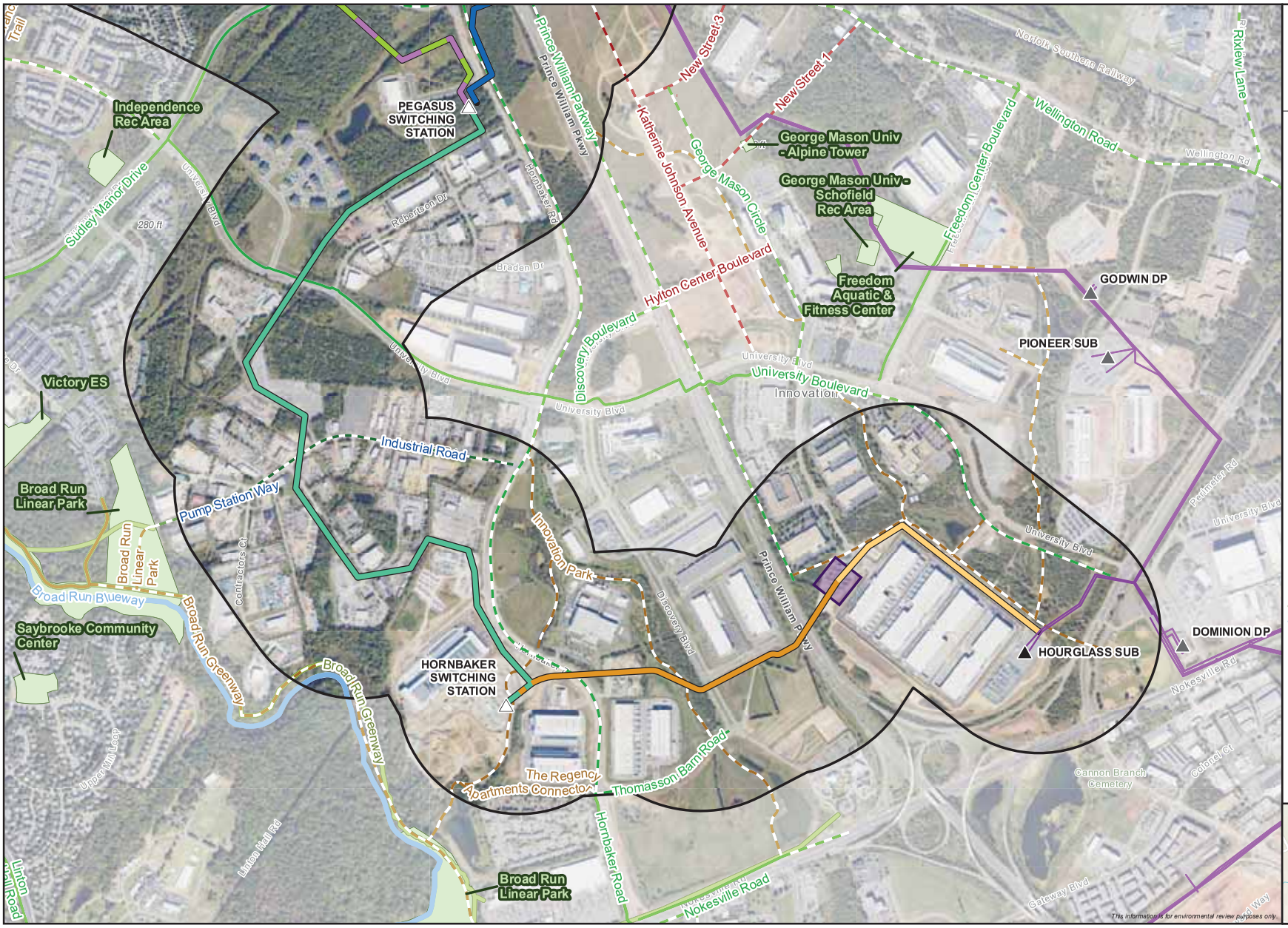

Dominion Energy

Figure 5.1-5
Recreational Areas within 0.25 Miles of Routes
Hornbaker 230 kV Line Loop Project
Dominion Energy
Prince William County, Virginia
Page 2 of 2

- Existing Substation
- Proposed Switching Station
- Existing Dominion Transmission Line
- Wellington – Pegasus Route 1
- Pegasus – Hornbaker Route 1
- Hourglass – Hornbaker Route 1 (Overhead)
- Hourglass – Hornbaker Route 1 (Underground)
- Proposed Transition Station
- Devlin – Pegasus Route 1
- Devlin – Pegasus Route 2
- Park

Trail Classification, Status

- Shared Use, Existing
- Shared Use, Planned
- Bicycle Lanes, Planned
- Paved Shoulder, Planned
- Park, Existing
- Park, Planned
- Greenway, Existing
- Blueway, Existing
- 0.25-Mile Buffer

0 500 1,000
Feet

1:12,000

ERM

N W E S

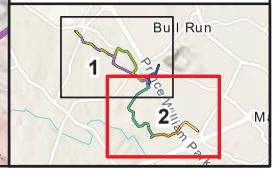

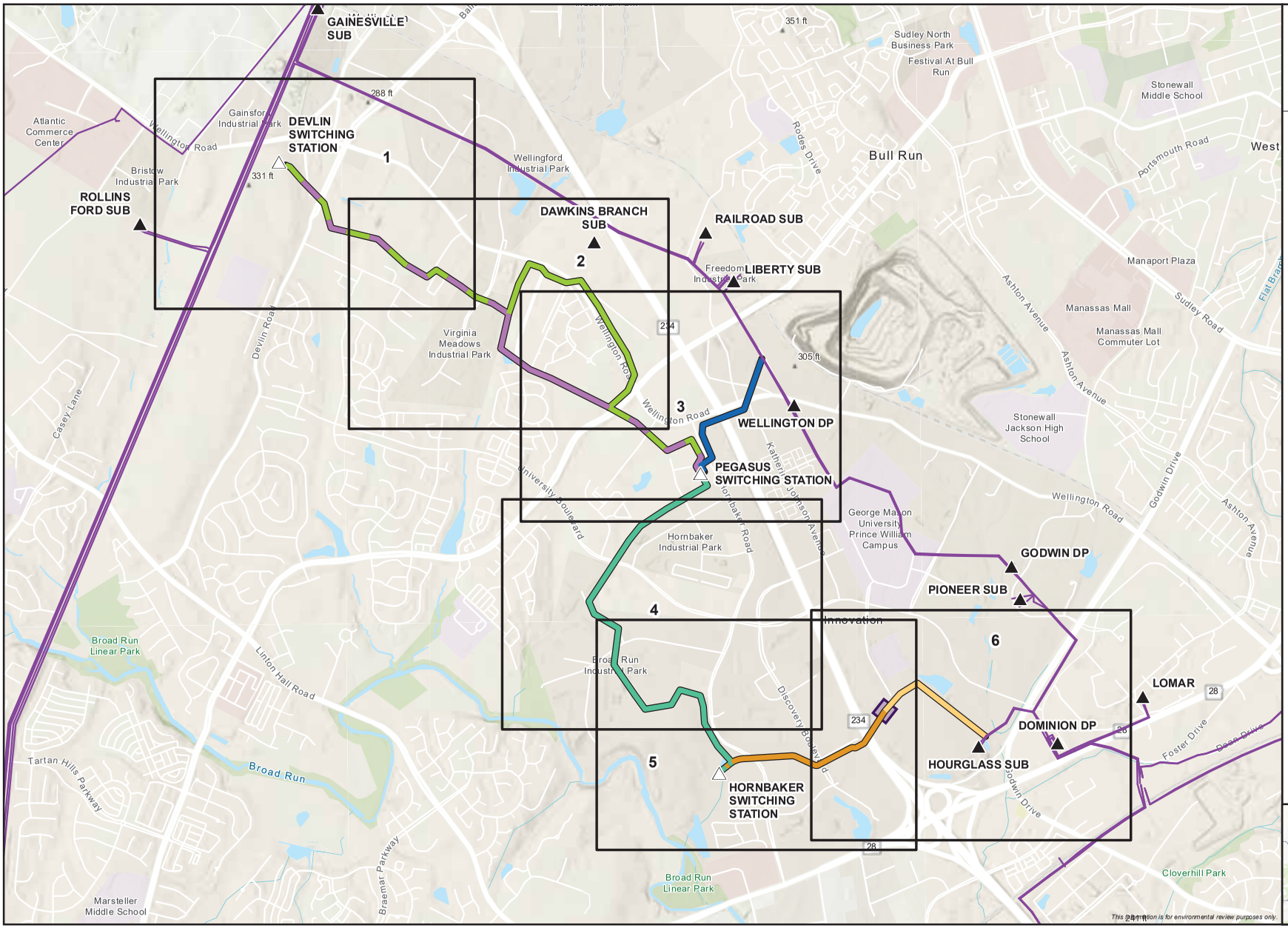

Dominion Energy

Figure 5.1-6

Cemeteries within 0.25 Miles of Routes Index Hornbaker 230 kV Line Loop Project

Dominion Energy

Prince William County, Virginia

Page 0 of 6

- Existing Substation
- Proposed Switching Station
- Existing Dominion Transmission Line
- Wellington – Pegasus Route 1
- Pegasus – Hornbaker Route 1
- Hourglass – Hornbaker Route 1 (Overhead)
- Hourglass – Hornbaker Route 1 (Underground)
- Proposed Transition Station
- Devlin – Pegasus Route 1
- Devlin – Pegasus Route 2
- Index Page

0 1,000 2,000 Feet

1:24,000

ERM

N W E S

Dominion Energy

Figure 5.1-6

Cemeteries within 0.25 mile of the Routes Hornbaker 230 kV Line Loop Project

Dominion Energy

Prince William County, Virginia

Page 1 of 6

- Proposed Switching Station
- Existing Dominion Transmission Line
- Devlin – Pegasus Route 1 MP
- Devlin – Pegasus Route 2 MP
- Devlin – Pegasus Route 1
- Devlin – Pegasus Route 2
- Devlin Switching Station Boundary
- 500-Foot Buffer
- 0.25-Mile Buffer

0 250 500
Feet

1:6,000

ERM

N W E S

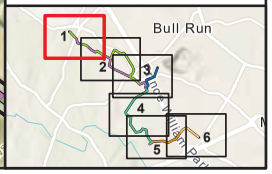

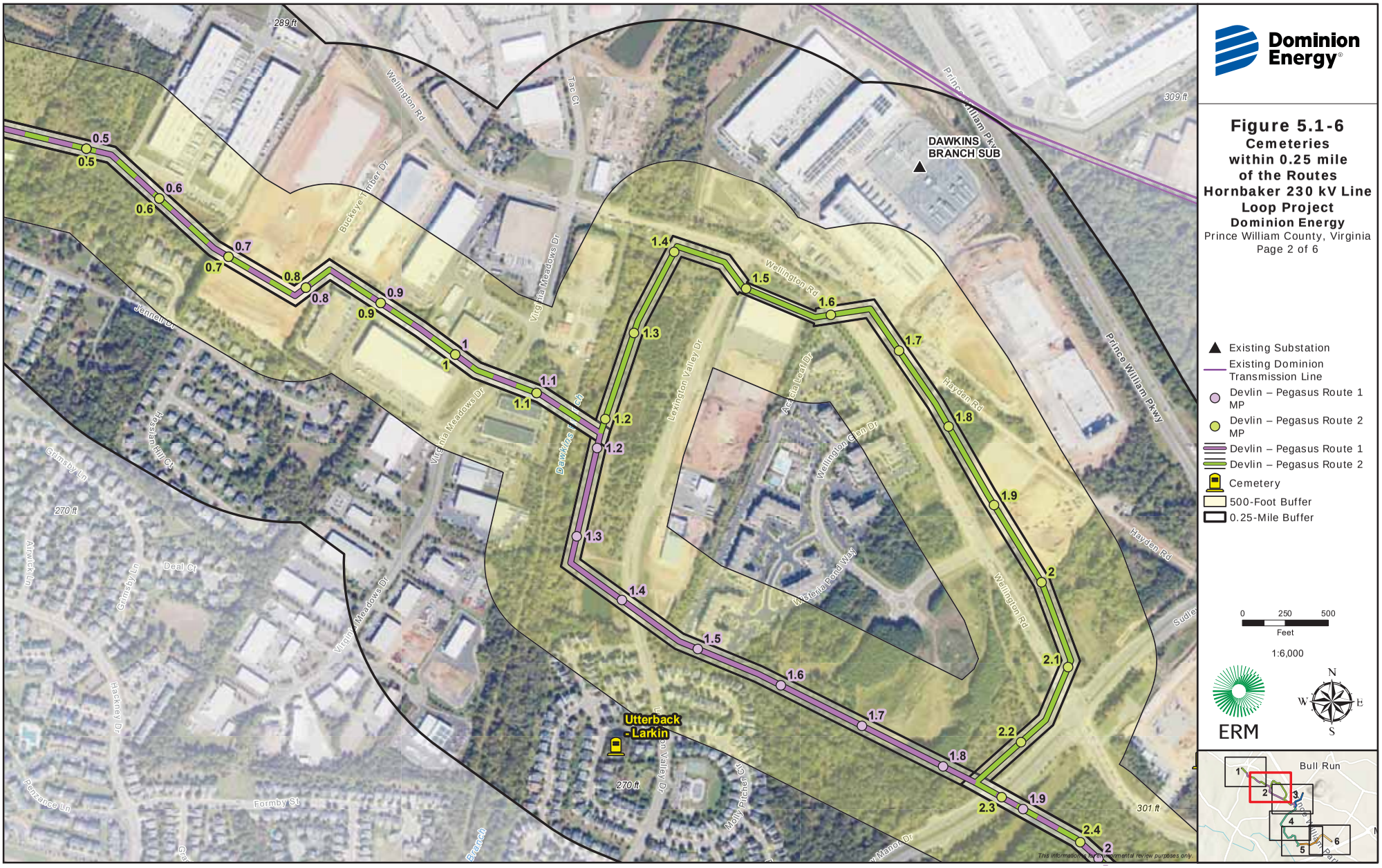
Dominion Energy
Figure 5.1-6
Cemeteries within 0.25 mile of the Routes
Hornbaker 230 kV Line Loop Project
Dominion Energy
Prince William County, Virginia
Page 2 of 6
Existing Substation
Existing Dominion Transmission Line
Devlin – Pegasus Route 1 MP
Devlin – Pegasus Route 2 MP
Devlin – Pegasus Route 1
Devlin – Pegasus Route 2
Cemetery
500-Foot Buffer
0.25-Mile Buffer
0 250 500
Feet
1:6,000
ERM
N
W
E
S
Bull Run
DAWKINS BRANCH SUB
Utterback - Larkin
Prince William Pkwy
Wellington Rd
Hayden Rd
Lexington Valley Dr
Virginia Meadows Dr
Buckeye Timber Dr
Tac Ct
Jenner Dr
Grimsby Ln
Deal Ct
Airdrie Ln
Hackney Dr
Penzance Ln
Formby St
Sudley
Acadia Leaf Dr
Wellington Glen Dr
Weberta Pond Way
Molly Pitcher Dr
Manor Dr
289 ft
309 ft
270 ft
301 ft
This information is for environmental review purposes only.

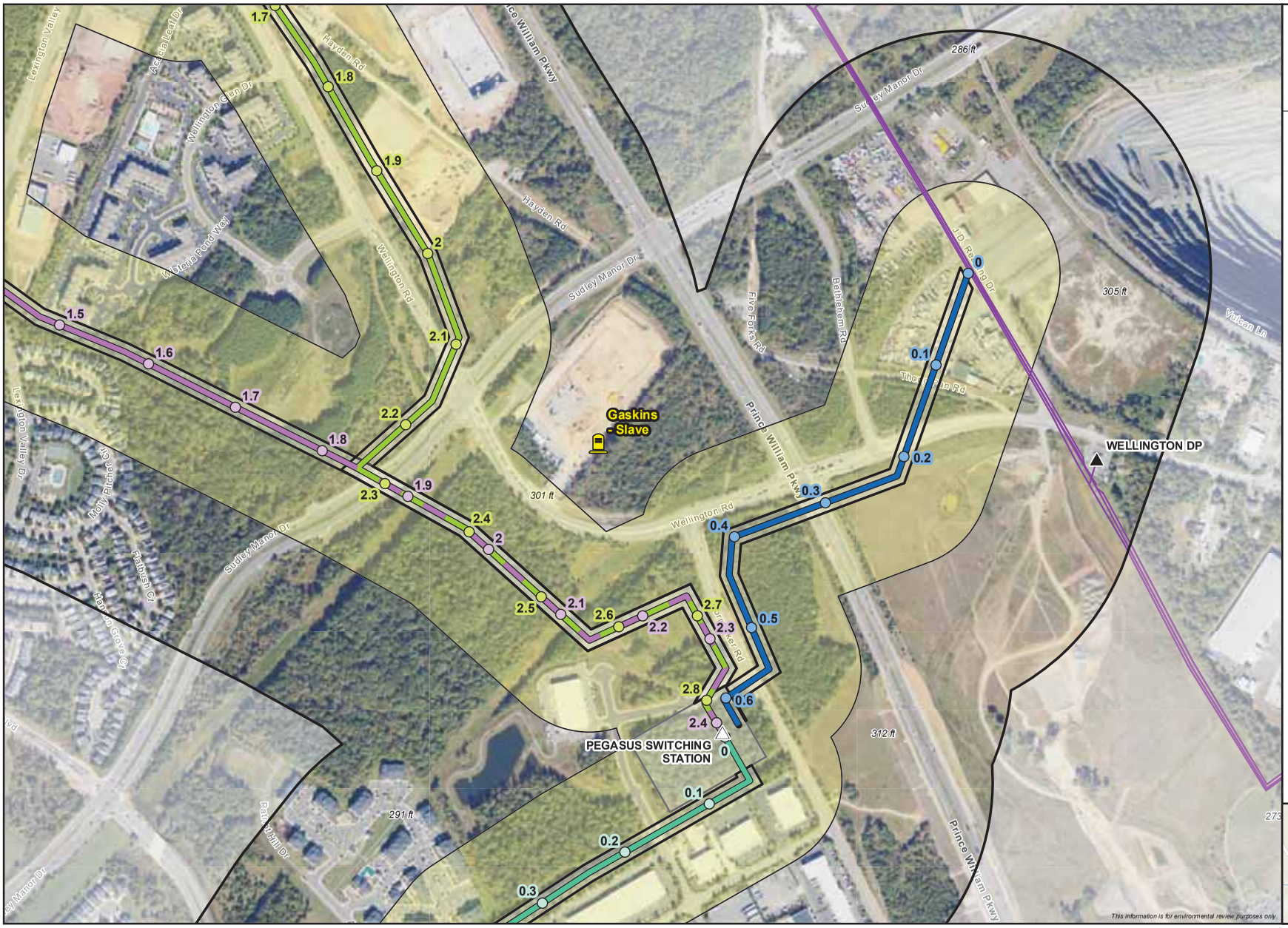

Dominion Energy

Figure 5.1-6

Cemeteries within 0.25 mile of the Routes Hornbaker 230 kV Line Loop Project

Dominion Energy

Prince William County, Virginia

Page 3 of 6

- Existing Substation
- Proposed Switching Station
- Existing Dominion Transmission Line
- Wellington – Pegasus Route 1 MP
- Pegasus – Hornbaker Route 1 MP
- Devlin – Pegasus Route 1 MP
- Devlin – Pegasus Route 2 MP
- Wellington – Pegasus Route 1
- Pegasus – Hornbaker Route 1
- Devlin – Pegasus Route 1
- Devlin – Pegasus Route 2
- Pegasus Switching Station Boundary
- Cemetery
- 500-Foot Buffer
- 0.25-Mile Buffer

0 250 500 Feet

1:6,000

ERM

N W E S

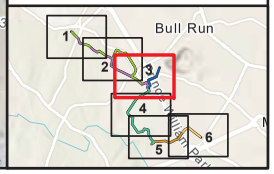

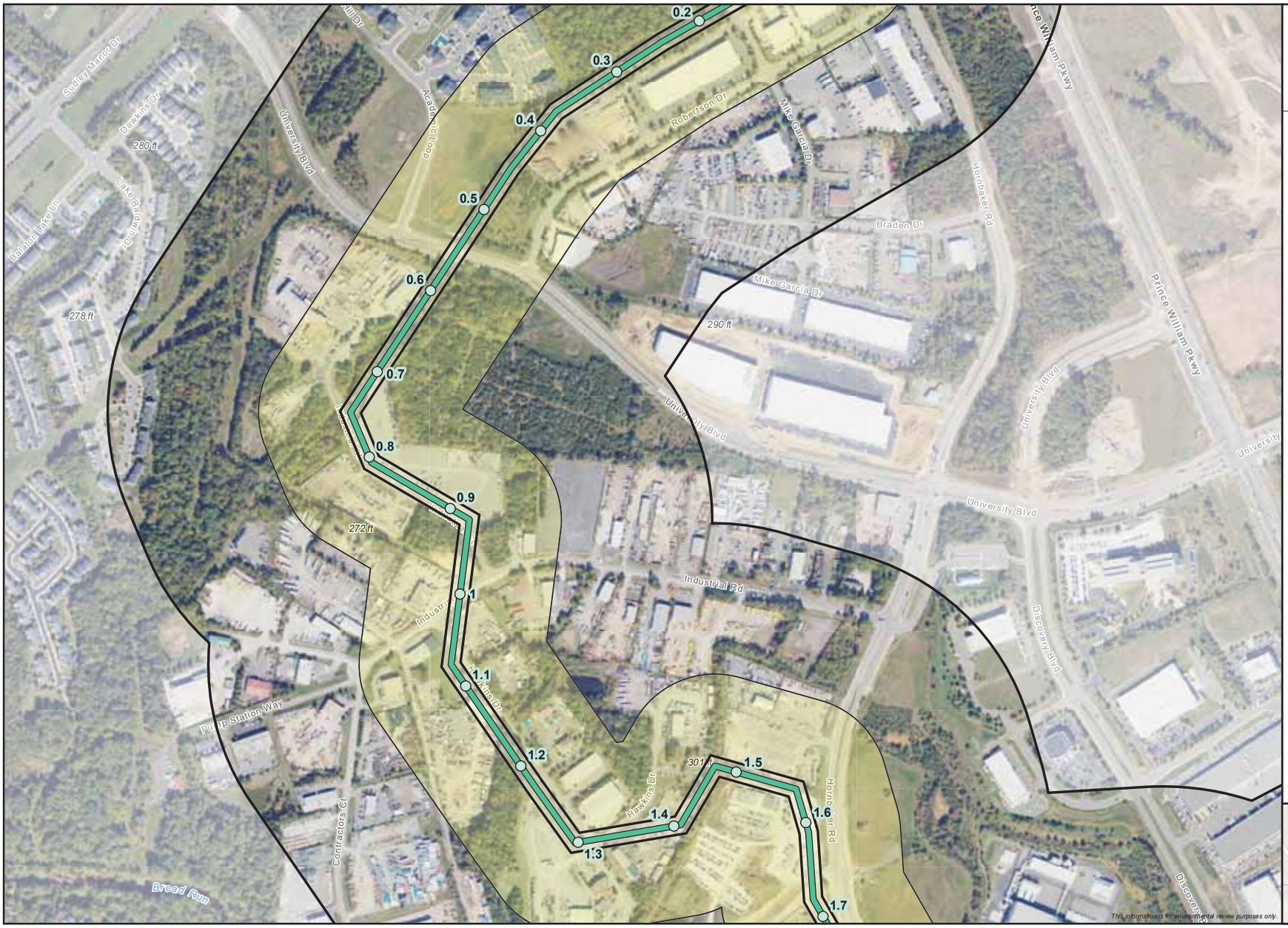

Dominion Energy

Figure 5.1-6
Cemeteries within 0.25 mile of the Routes Hornbaker 230 kV Line Loop Project
Dominion Energy
Prince William County, Virginia
Page 4 of 6

Pegasus – Hornbaker Route 1 MP
Pegasus – Hornbaker Route 1
500-Foot Buffer
0.25-Mile Buffer

0 250 500
Feet
1:6,000

ERM

N W E S

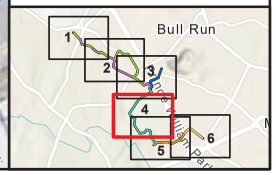

Dominion Energy

Figure 5.1-6

Cemeteries within 0.25 mile of the Routes
Hornbaker 230 kV Line Loop Project
Dominion Energy
Prince William County, Virginia
Page 5 of 6

- Proposed Switching Station
- Pegasus – Hornbaker Route 1 MP
- Hourglass – Hornbaker Route 1 MP
- Pegasus – Hornbaker Route 1
- Hourglass – Hornbaker Route 1 (Overhead)
- Hourglass – Hornbaker Route 1 (Underground)
- Proposed Transition Station
- Proposed Hornbaker Switching Station Boundary
- 500-Foot Buffer
- 0.25-Mile Buffer

0 250 500
Feet

1:6,000

ERM

N W E S

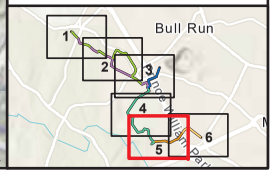

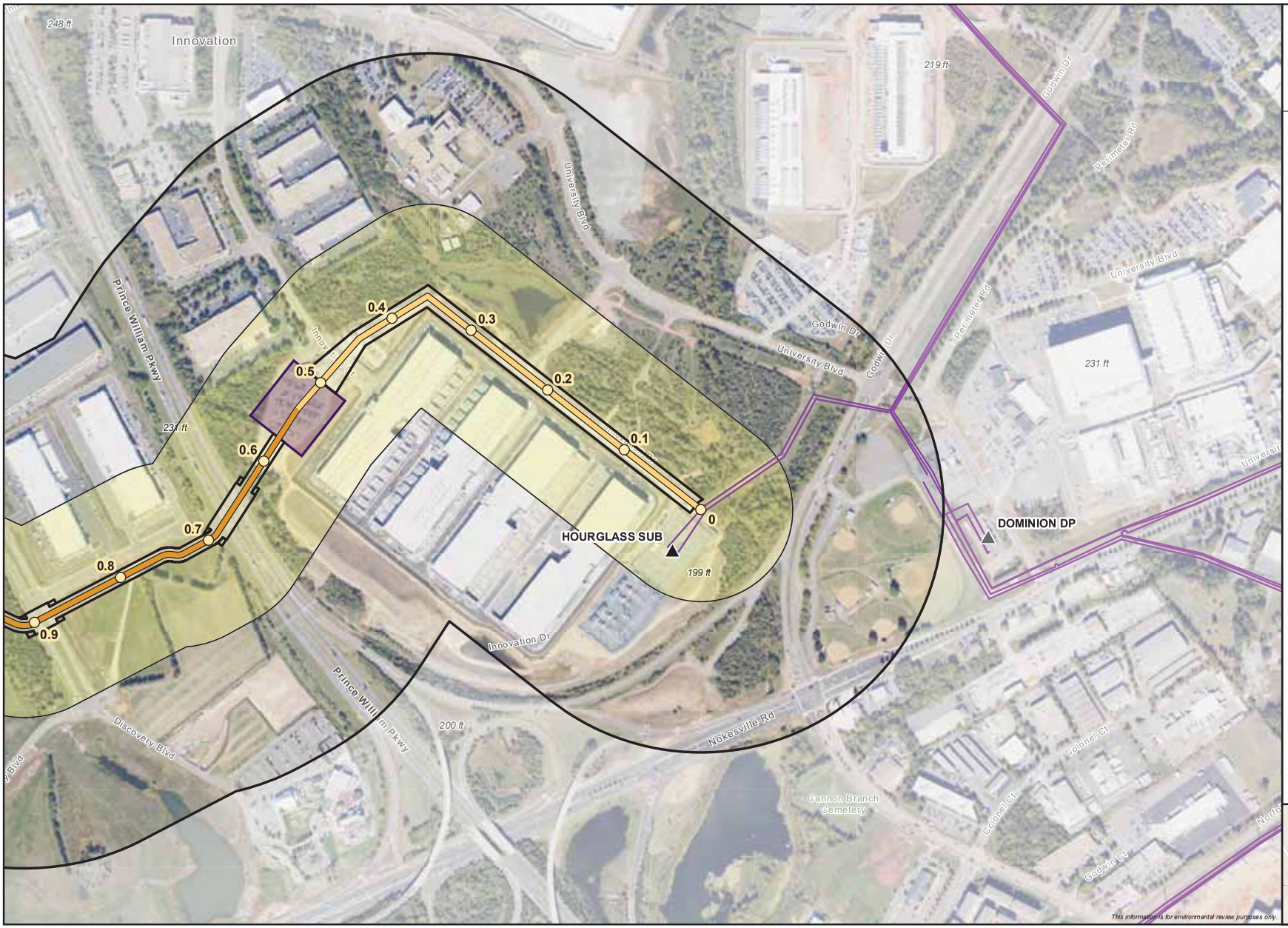

Dominion Energy

Figure 5.1-6
Cemeteries within 0.25 mile of the Routes
Hornbaker 230 kV Line Loop Project
Dominion Energy
Prince William County, Virginia
Page 6 of 6

- Existing Substation
- Existing Dominion Transmission Line
- Hourglass – Hornbaker Route 1 MP
- Hourglass – Hornbaker Route 1 (Overhead)
- Hourglass – Hornbaker Route 1 (Underground)
- Proposed Transition Station
- 500-Foot Buffer
- 0.25-Mile Buffer

0 250 500
Feet
1:6,000

ERM

N W E S

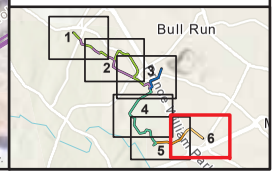

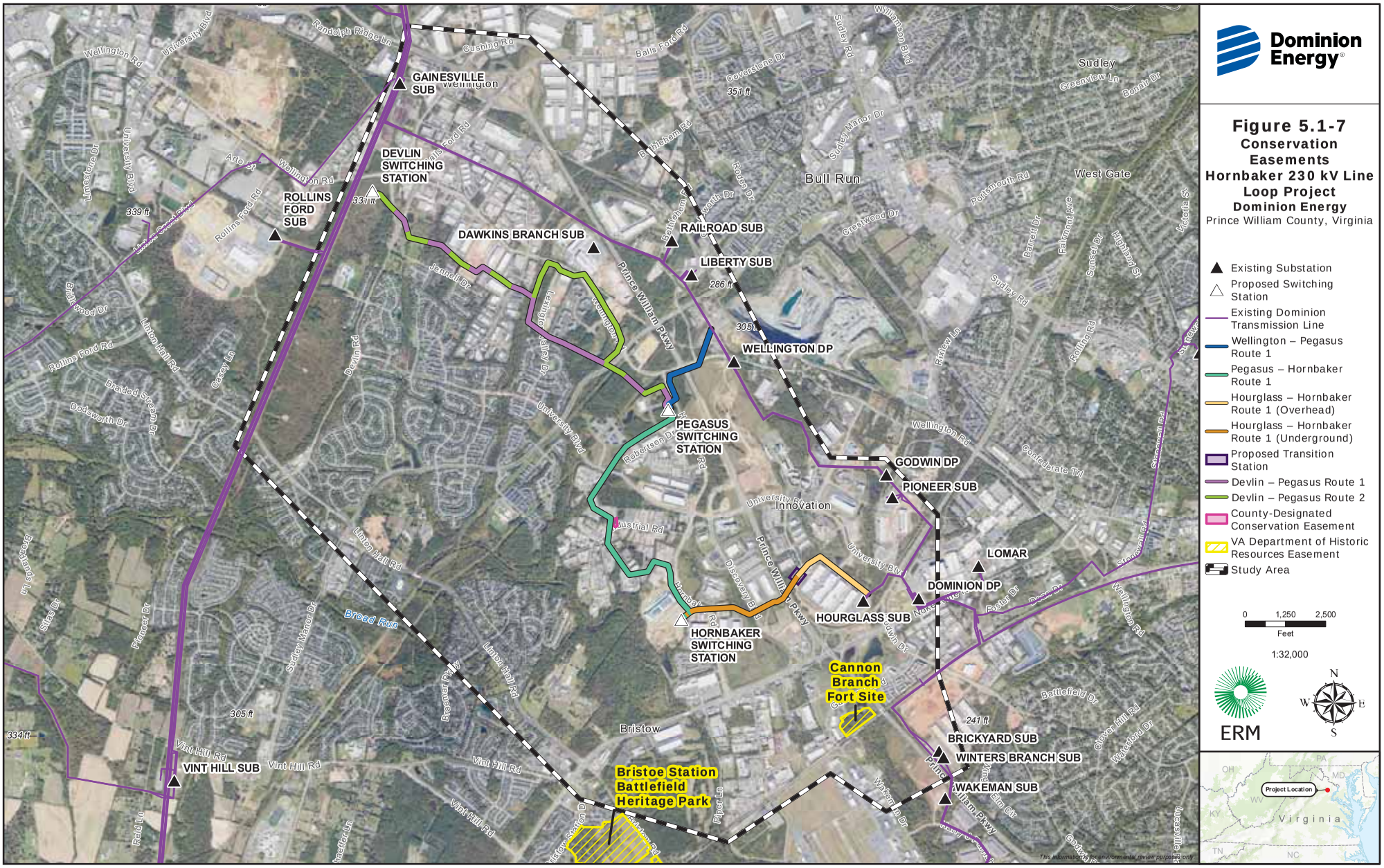

Dominion Energy

Figure 5.1-7
Conservation Easements
Hornbaker 230 kV Line Loop Project
Dominion Energy
Prince William County, Virginia

- Existing Substation
- Proposed Switching Station
- Existing Dominion Transmission Line
- Wellington – Pegasus Route 1
- Pegasus – Hornbaker Route 1
- Hourglass – Hornbaker Route 1 (Overhead)
- Hourglass – Hornbaker Route 1 (Underground)
- Proposed Transition Station
- Devlin – Pegasus Route 1
- Devlin – Pegasus Route 2
- County-Designated Conservation Easement
- VA Department of Historic Resources Easement
- Study Area

0 1,250 2,500
Feet

1:32,000

ERM

N
W E
S

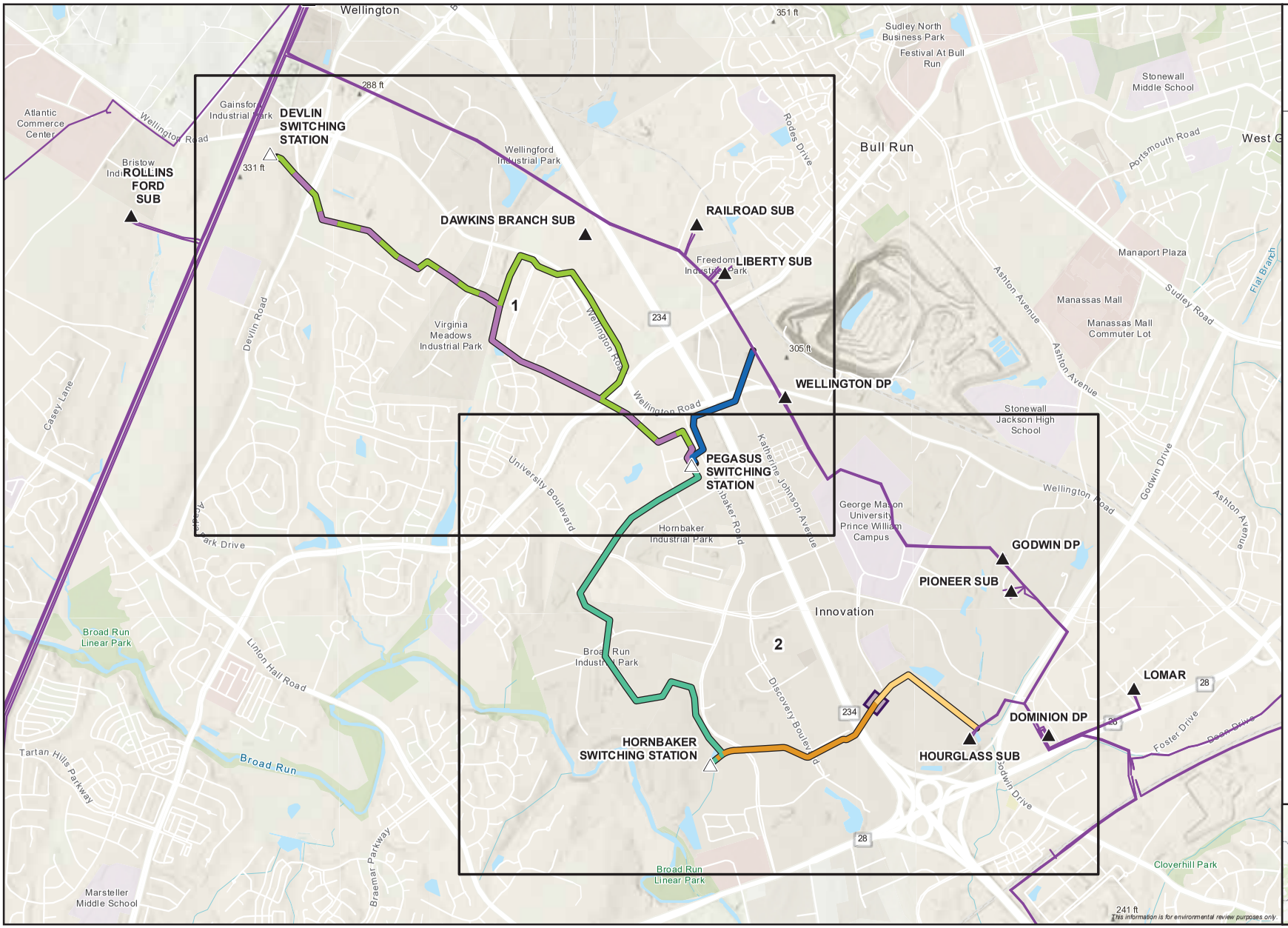

Dominion Energy

Figure 5.1-8
Existing/Planned Road Projects Index Hornbaker 230 kV Line Loop Project
Dominion Energy
Prince William County, Virginia
Page 0 of 2

- Existing Substation
- Proposed Switching Station
- Existing Dominion Transmission Line
- Wellington – Pegasus Route 1
- Pegasus – Hornbaker Route 1
- Hourglass – Hornbaker Route 1 (Overhead)
- Hourglass – Hornbaker Route 1 (Underground)
- Proposed Transition Station
- Devlin – Pegasus Route 1
- Devlin – Pegasus Route 2
- Index Page

0 1,000 2,000
Feet
1:24,000

ERM

N W E S

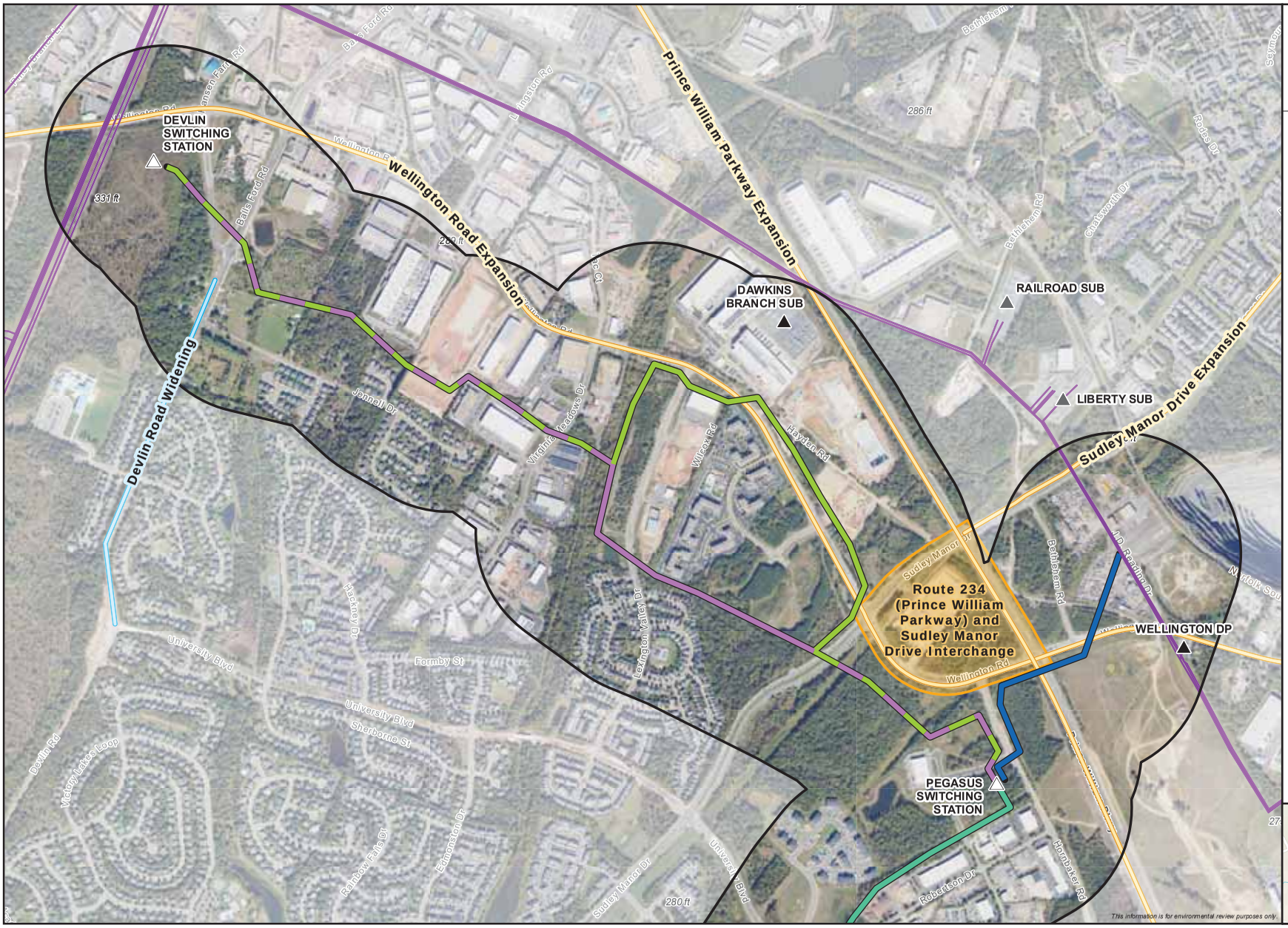

Dominion Energy

Figure 5.1-8

Existing / Planned Road Projects
Hornbaker 230 kV Line Loop Project
Dominion Energy
Prince William County, Virginia
Page 1 of 2

- Existing Substation
- Proposed Switching Station
- Existing Dominion Transmission Line
- Wellington – Pegasus Route 1
- Pegasus – Hornbaker Route 1
- Devlin – Pegasus Route 1
- Devlin – Pegasus Route 2

Road Project Status

- Planned
- Under Construction
- Planned
- 0.25-Mile Buffer

0 500 1,000
Feet

1:12,000

ERM

N W E S

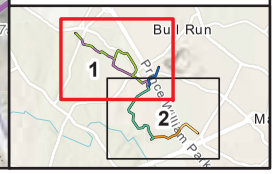

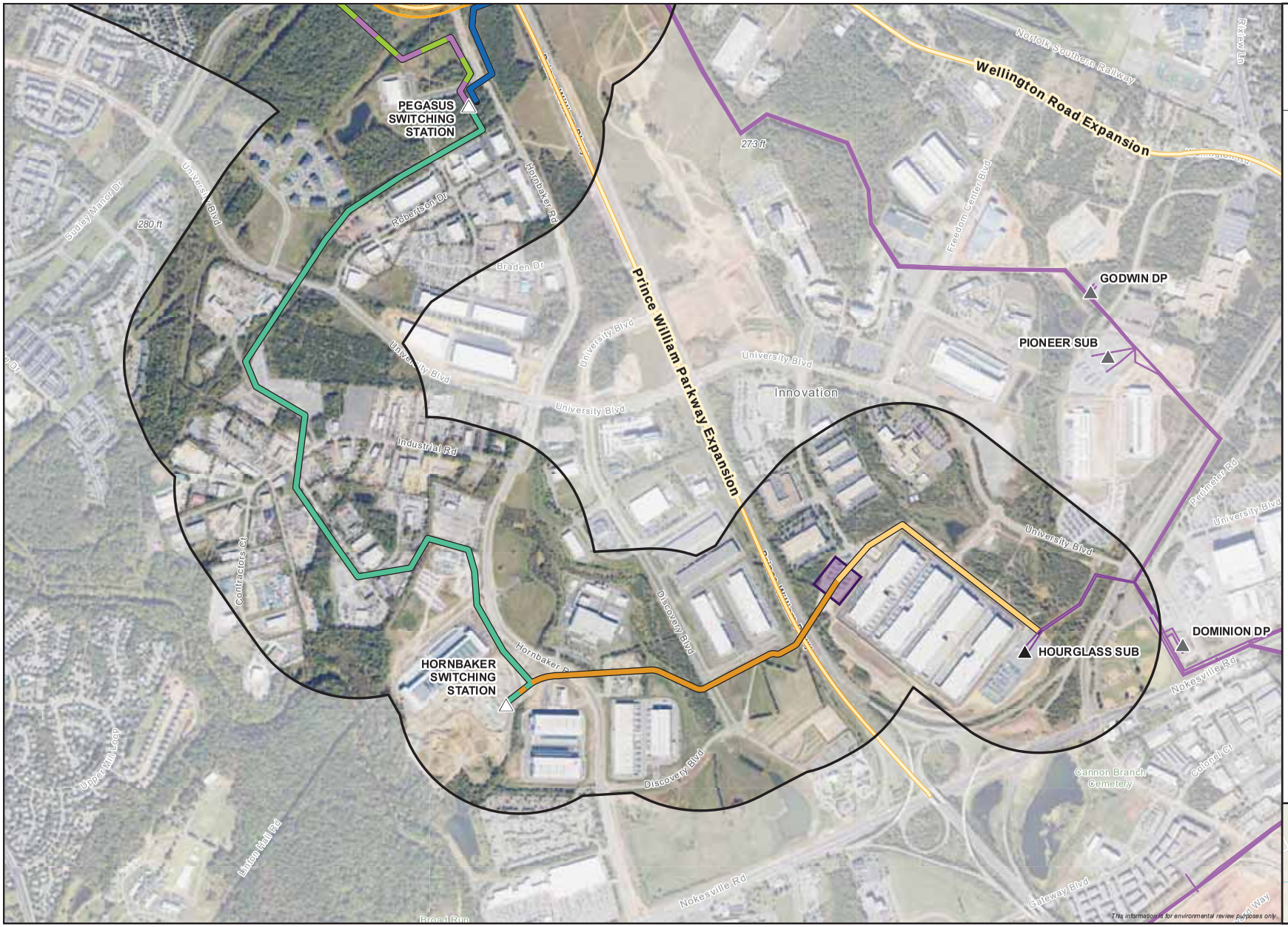

Dominion Energy

Figure 5.1-8

Existing / Planned Road Projects
Hornbaker 230 kV Line Loop Project
Dominion Energy
Prince William County, Virginia
Page 2 of 2

- Existing Substation
- Proposed Switching Station
- Existing Dominion Transmission Line
- Wellington – Pegasus Route 1
- Pegasus – Hornbaker Route 1
- Hourglass – Hornbaker Route 1 (Overhead)
- Hourglass – Hornbaker Route 1 (Underground)
- Proposed Transition Station
- Devlin – Pegasus Route 1
- Devlin – Pegasus Route 2

Road Project Status

- Planned
- Planned
- 0.25-Mile Buffer

0 500 1,000
Feet

1:12,000

ERM

N W E S

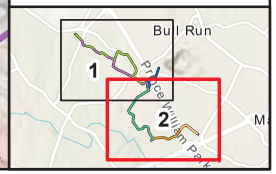

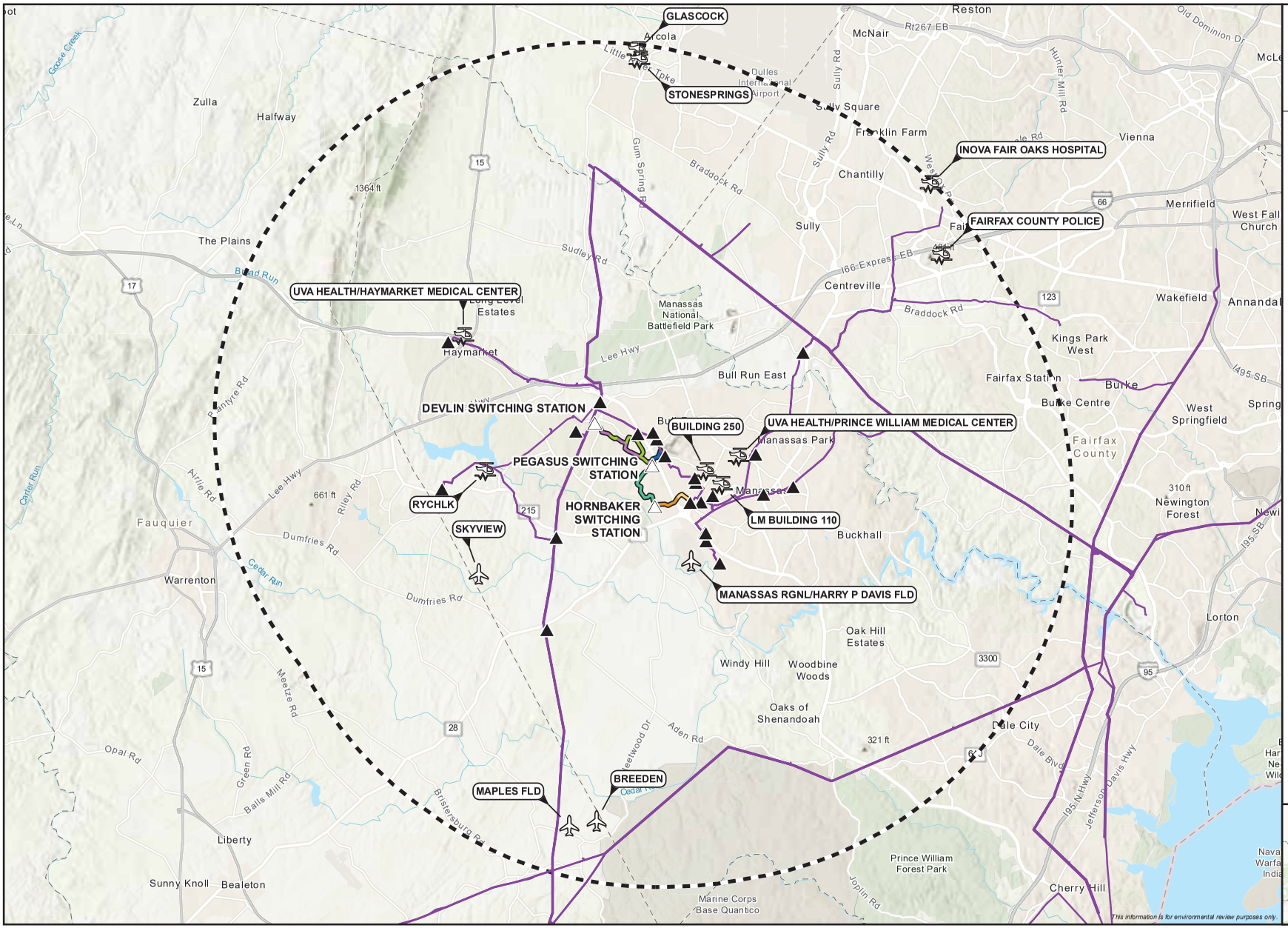

Dominion Energy

Figure 5.1-9
Airports within 10 Nautical Miles
Hornbaker 230 kV Line Loop Project
Dominion Energy
Prince William County, Virginia

- Existing Substation
- Proposed Switching Station
- Existing Dominion Transmission Line
- Wellington – Pegasus Route 1
- Pegasus – Hornbaker Route 1
- Hourglass – Hornbaker Route 1 (Overhead)
- Hourglass – Hornbaker Route 1 (Underground)
- Devlin – Pegasus Route 1
- Devlin – Pegasus Route 2
- Airport
- Heliport
- 10-Nautical Mile

0 1.5 3
Miles

1:176,000

ERM

N W E S

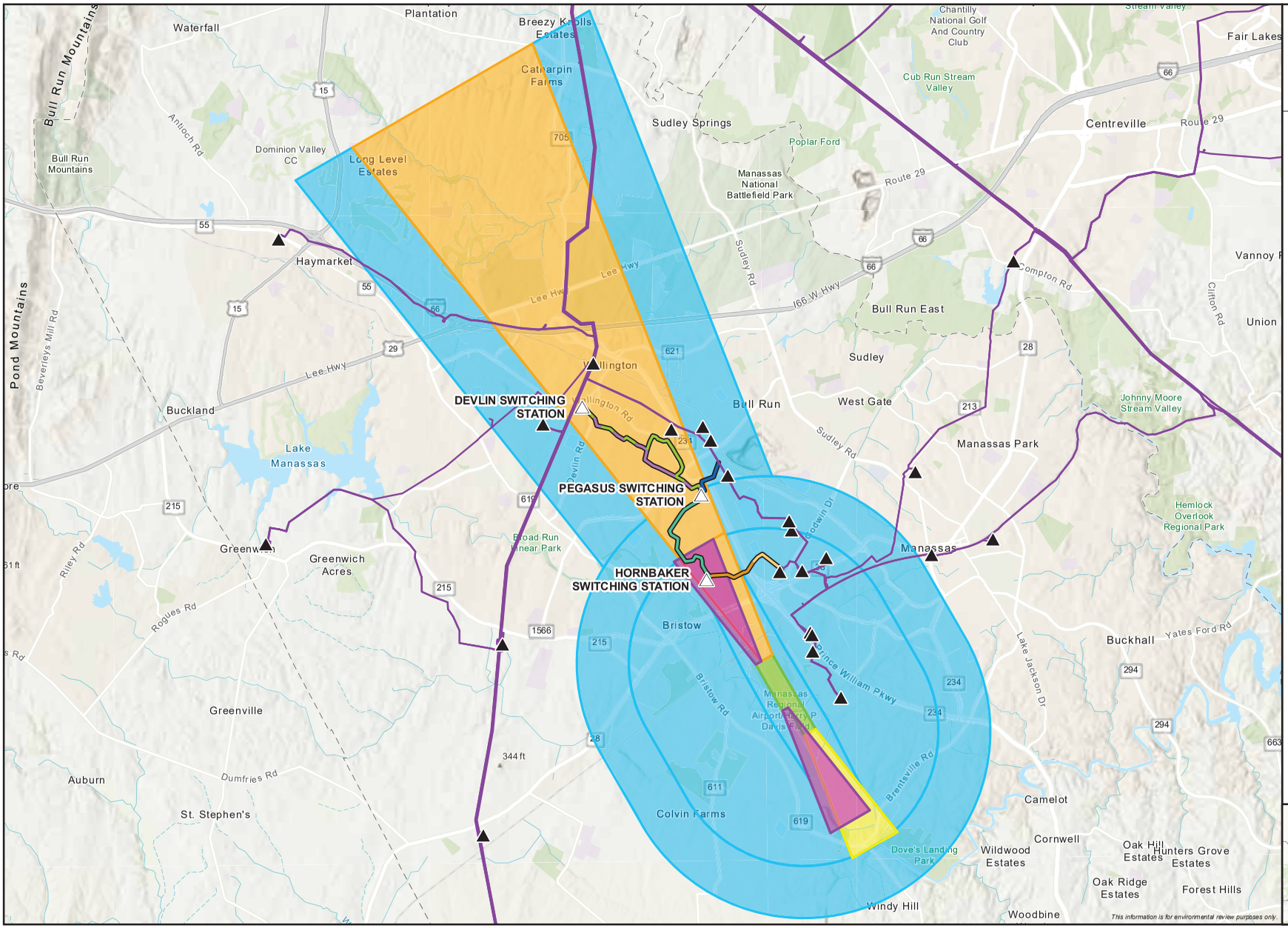

Dominion Energy

Figure 5.1-10
Airport Imaginary Surfaces
Hornbaker 230 kV Line Loop Project
Dominion Energy
Prince William County, Virginia

- Existing Substation
- Proposed Switching Station
- Existing Dominion Transmission Line
- Wellington – Pegasus Route 1
- Pegasus – Hornbaker Route 1
- Hourglass – Hornbaker Route 1 (Overhead)
- Hourglass – Hornbaker Route 1 (Underground)
- Devlin – Pegasus Route 1
- Devlin – Pegasus Route 2
- Approach Surface-16L
- Approach Surface-16R/34L
- Primary Surface-16L/34R
- Transitional Surface-16L/34R
- Approach Surface 34R

0 3,500 7,000
Feet

1:85,000

ERM

N W E S

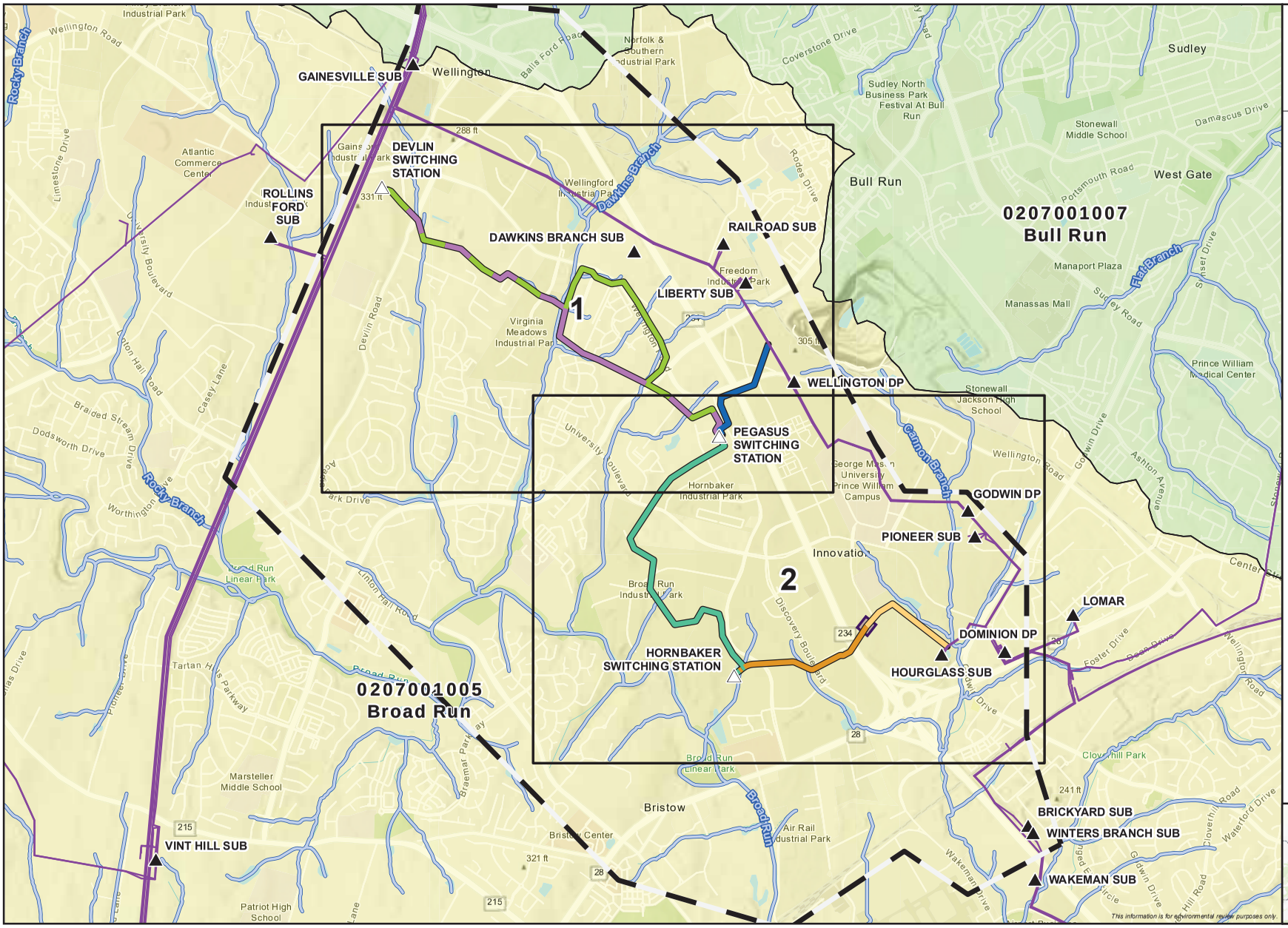

Dominion Energy

Figure 5.2-1
Surface Waters
Hornbaker 230 kV Line Loop Project
Dominion Energy
Prince William County, Virginia
Page 0 of 2

- Existing Substation
- Proposed Switching Station
- Existing Dominion Transmission Line
- Wellington – Pegasus Route 1
- Pegasus – Hornbaker Route 1
- Hourglass – Hornbaker Route 1 (Overhead)
- Hourglass – Hornbaker Route 1 (Underground)
- Proposed Transition Station
- Devlin – Pegasus Route 1
- Devlin – Pegasus Route 2
- NHD Flowline
- Index Page
- Study Area

HUC 10 Watershed
- Broad Run
- Bull Run

0 1,250 2,500
Feet
1:30,000

ERM

N W E S

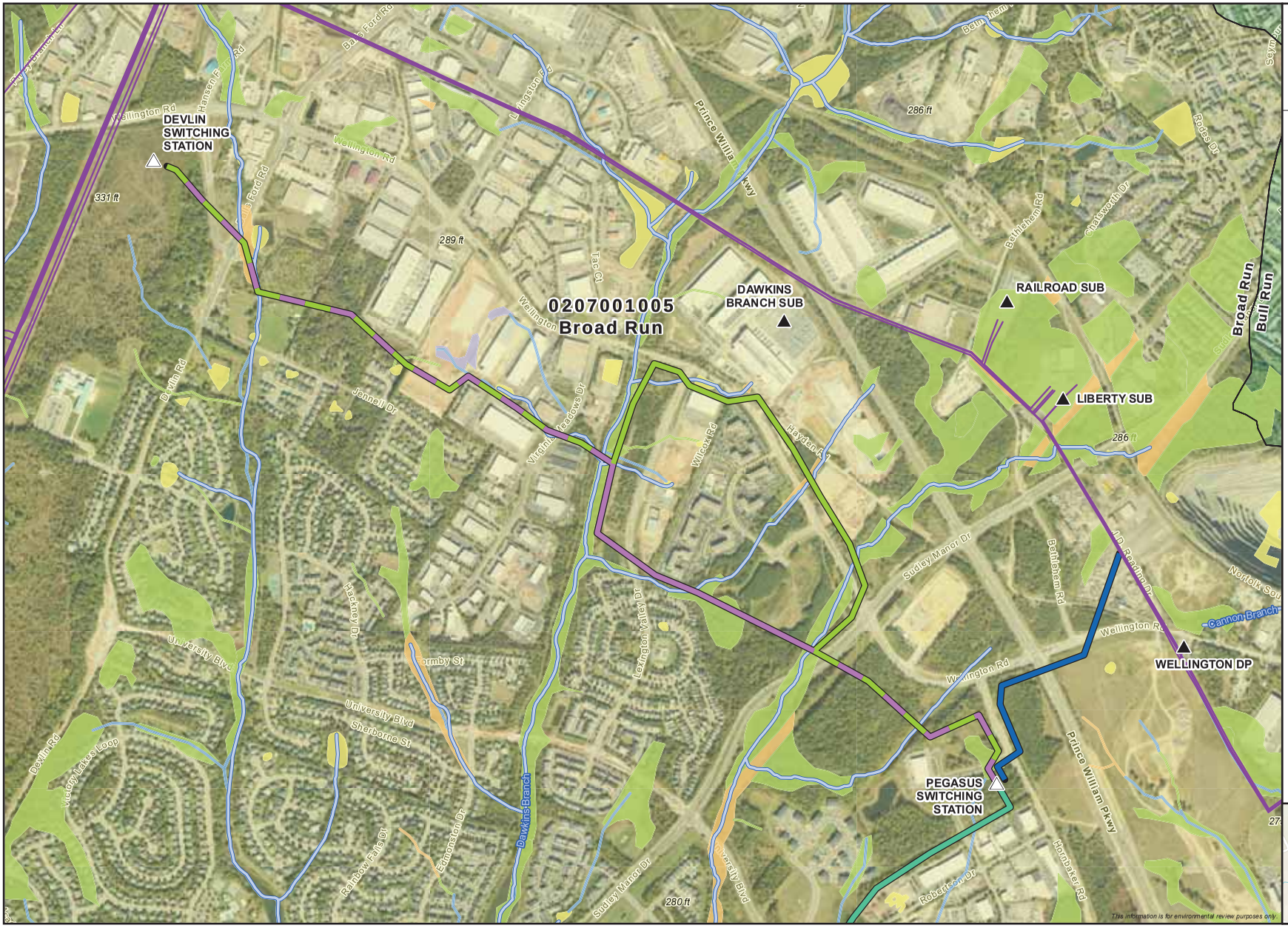

Dominion Energy

Figure 5.2-1
Surface Waters
Hornbaker 230 kV Line Loop Project
Dominion Energy
Prince William County, Virginia
Page 1 of 2

- Existing Substation
- Proposed Switching Station
- Existing Dominion Transmission Line
- Wellington – Pegasus Route 1
- Pegasus – Hornbaker Route 1
- Devlin – Pegasus Route 1
- Devlin – Pegasus Route 2
- NHD Flowline

Wetland Type (NWI Wetlands)
- Freshwater Emergent Wetland
- Freshwater Forested/Shrub Wetland
- Freshwater Pond
- Other
- Riverine

HUC 10 Watershed
- Broad Run
- Bull Run

0 750 1,500
Feet
1:12,000

ERM

N W E S

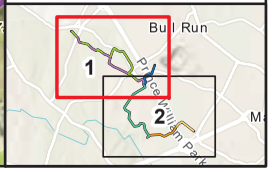

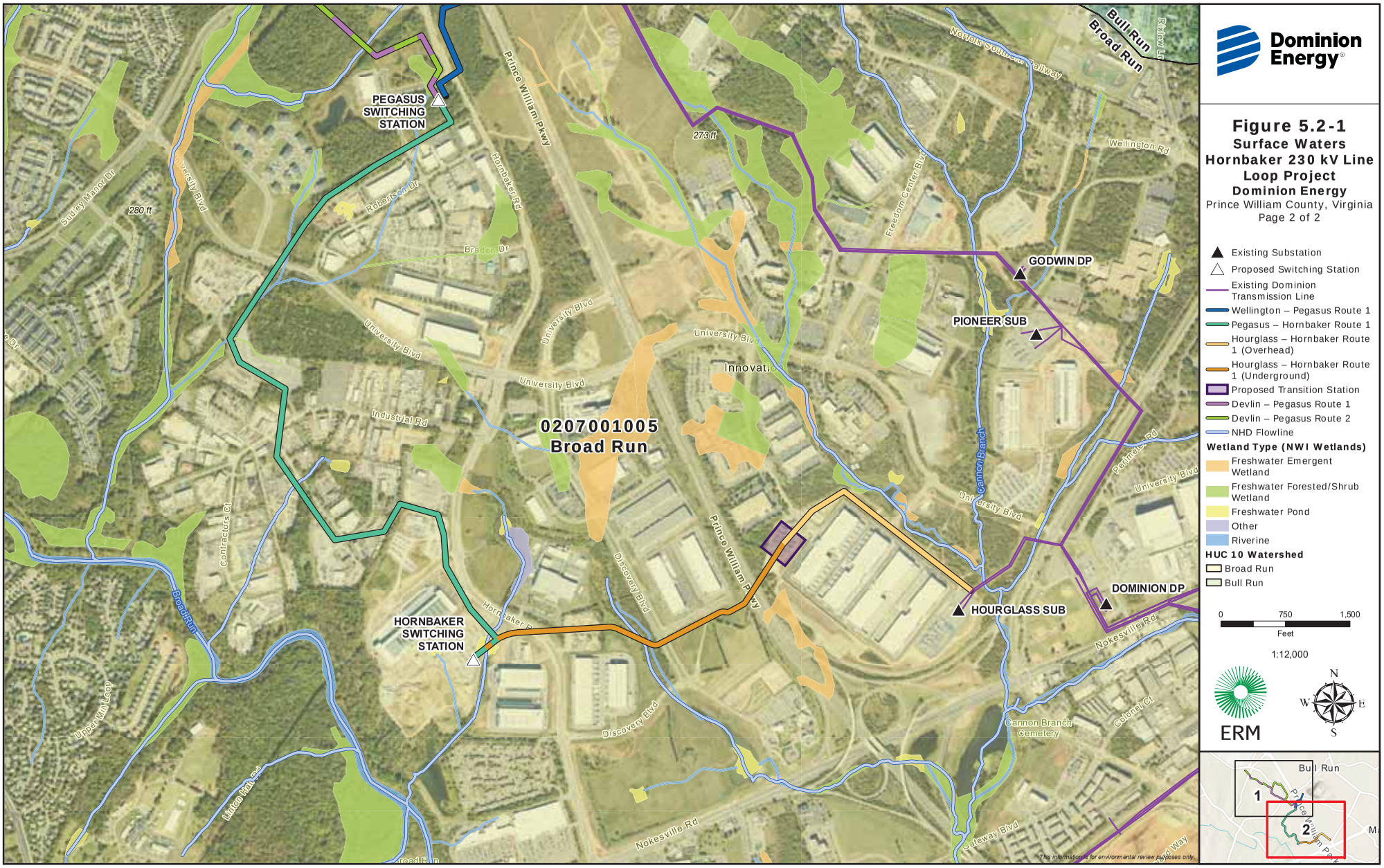
Dominion Energy
Figure 5.2-1
Surface Waters
Hornbaker 230 kV Line Loop Project
Dominion Energy
Prince William County, Virginia
Page 2 of 2
Existing Substation
Proposed Switching Station
Existing Dominion Transmission Line
Wellington – Pegasus Route 1
Pegasus – Hornbaker Route 1
Hourglass – Hornbaker Route 1 (Overhead)
Hourglass – Hornbaker Route 1 (Underground)
Proposed Transition Station
Devlin – Pegasus Route 1
Devlin – Pegasus Route 2
NHD Flowline
Wetland Type (NWI Wetlands)
Freshwater Emergent Wetland
Freshwater Forested/Shrub Wetland
Freshwater Pond
Other
Riverine
HUC 10 Watershed
Broad Run
Bull Run
0
750
1,500
Feet
1:12,000
ERM
N
W
E
S
PEGASUS SWITCHING STATION
HORNBAKER SWITCHING STATION
GODWIN DP
PIONEER SUB
HOURGLASS SUB
DOMINION DP
0207001005
Broad Run
Bull Run
Broad Run
Prince William Pkwy
Hornbaker Rd
University Blvd
Industrial Rd
Discovery Blvd
Nokesville Rd
Freedom Center Blvd
Wellington Rd
Cannon Branch
Cannon Branch Cemetery
Colonel Ct
Contractors Ct
Upper Mill Loop
Sudley Manor Dr
Robertson Dr
Braden Dr
Norfolk Southern Railway
Innovation
273 ft
280 ft
This information is for environmental review purposes only.
Bull Run
1
2

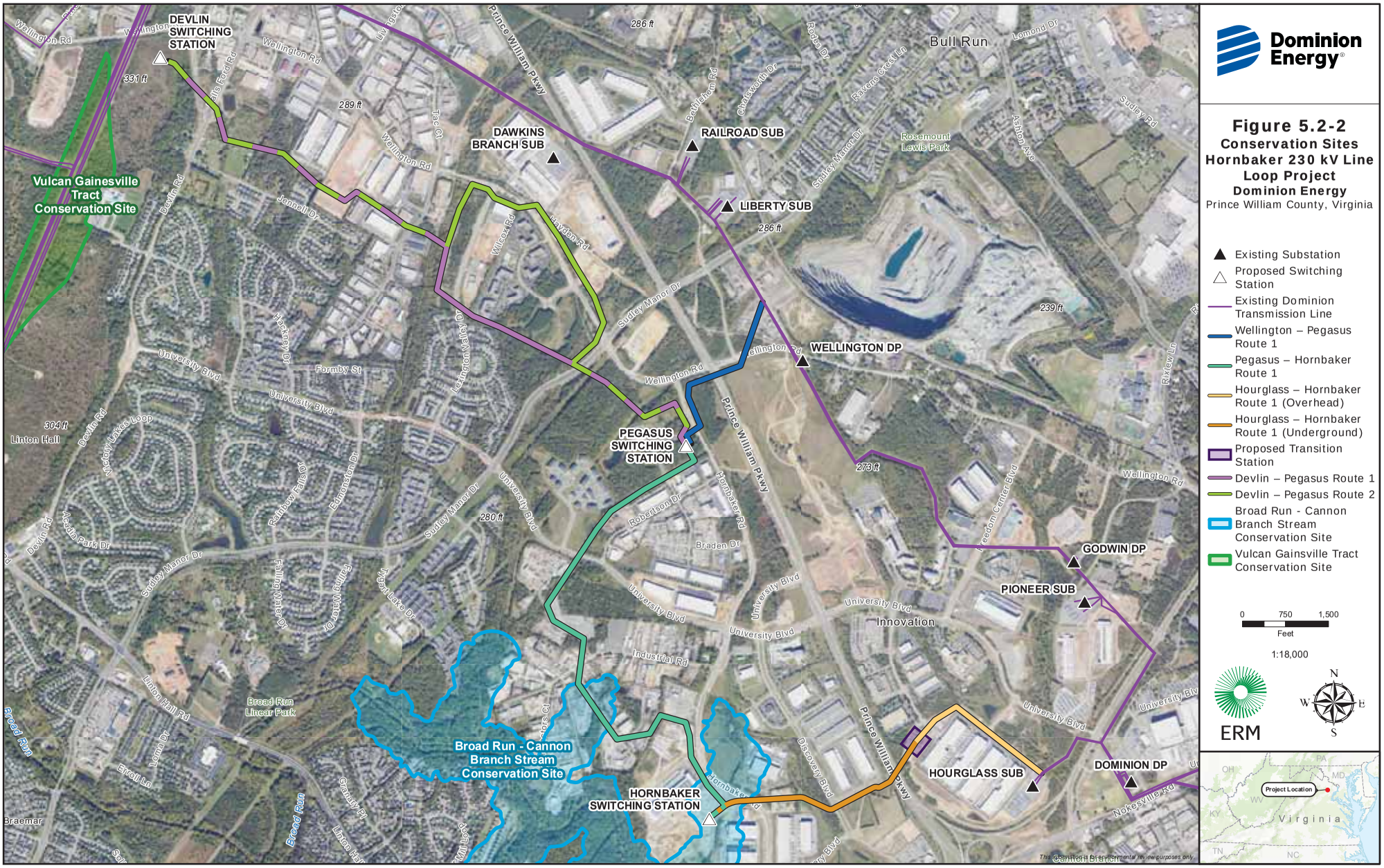
DEVLIN SWITCHING STATION
DAWKINS BRANCH SUB
RAILROAD SUB
LIBERTY SUB
WELLINGTON DP
PEGASUS SWITCHING STATION
GODWIN DP
PIONEER SUB
HOURGLASS SUB
DOMINION DP
HORNBAKER SWITCHING STATION
Vulcan Gainesville Tract Conservation Site
Broad Run - Cannon Branch Stream Conservation Site
Bull Run
Innovation
Linton Hall
Broad Run Linear Park
Rosemount Lewis Park
Prince William Pkwy
Wellington Rd
University Blvd
Sudley Manor Dr
Devlin Rd
Nokesville Rd
Discovery Blvd
Industrial Rd
Braden Dr
Hornbaker Rd
Freedom Center Blvd
Broad Run
286 ft
331 ft
289 ft
239 ft
304 ft
273 ft
280 ft
Dominion Energy
Figure 5.2-2
Conservation Sites
Hornbaker 230 kV Line Loop Project
Dominion Energy
Prince William County, Virginia
Existing Substation
Proposed Switching Station
Existing Dominion Transmission Line
Wellington – Pegasus Route 1
Pegasus – Hornbaker Route 1
Hourglass – Hornbaker Route 1 (Overhead)
Hourglass – Hornbaker Route 1 (Underground)
Proposed Transition Station
Devlin – Pegasus Route 1
Devlin – Pegasus Route 2
Broad Run - Cannon Branch Stream Conservation Site
Vulcan Gainsville Tract Conservation Site
0 750 1,500
Feet
1:18,000
ERM
N
W
E
S
Project Location
Virginia
The Cannons Branch is for illustrative purposes only.

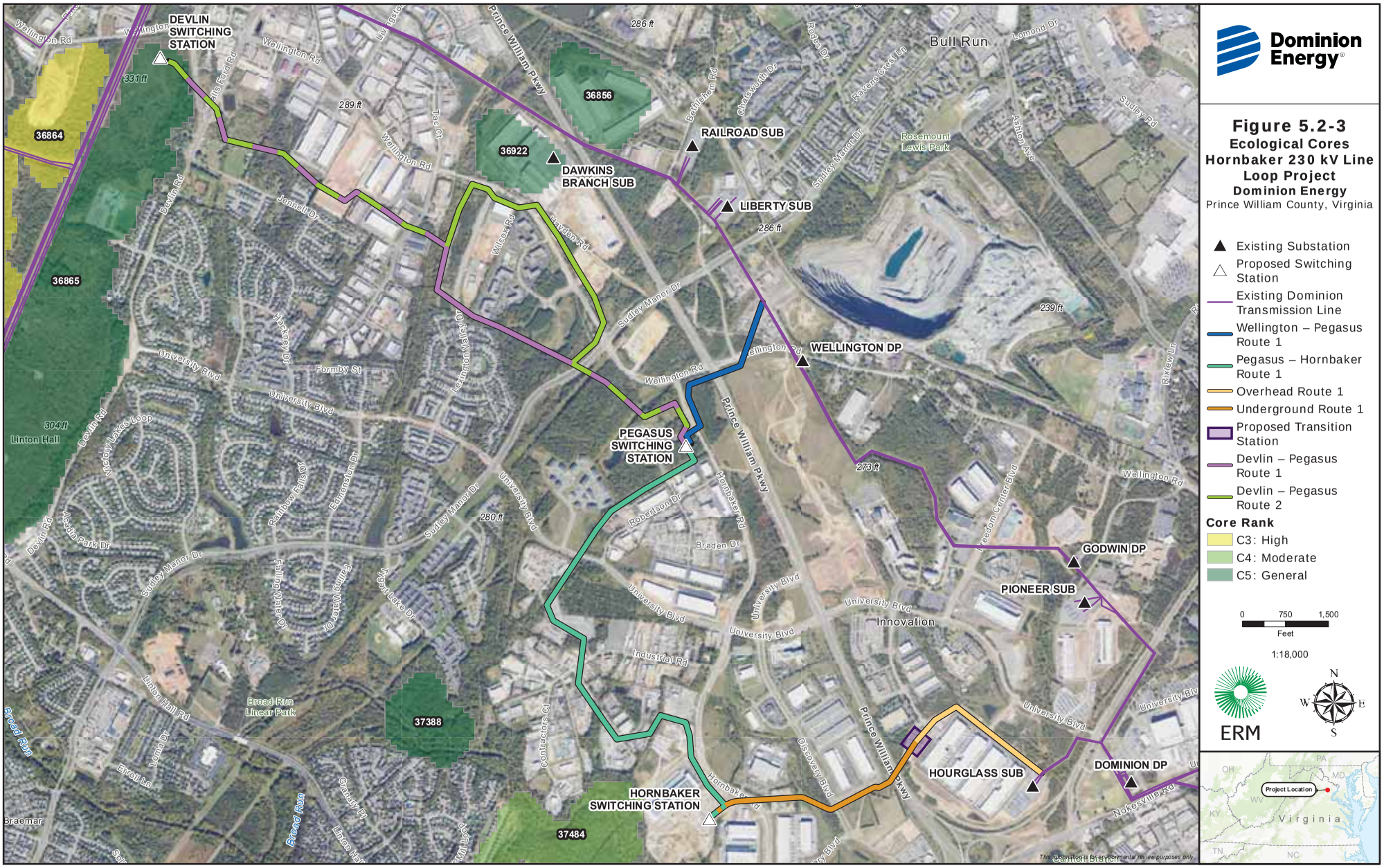
DEVLIN SWITCHING STATION
RAILROAD SUB
DAWKINS BRANCH SUB
LIBERTY SUB
WELLINGTON DP
PEGASUS SWITCHING STATION
GODWIN DP
PIONEER SUB
HOURGLASS SUB
DOMINION DP
HORNBAKER SWITCHING STATION
36864
36865
36856
36922
37388
37484
Bull Run
Rosemount Lewis Park
Linton Hall
Innovation
Broad Run Linear Park
Prince William Pkwy
Wellington Rd
University Blvd
Sudley Manor Dr
Devlin Rd
Hornbaker Rd
Nokesville Rd
Discovery Blvd
Freedom Center Blvd
Braemar
Broad Run
The Carrion's Branch is for illustrative purposes only.
Dominion Energy
Figure 5.2-3
Ecological Cores
Hornbaker 230 kV Line Loop Project
Dominion Energy
Prince William County, Virginia
Existing Substation
Proposed Switching Station
Existing Dominion Transmission Line
Wellington – Pegasus Route 1
Pegasus – Hornbaker Route 1
Overhead Route 1
Underground Route 1
Proposed Transition Station
Devlin – Pegasus Route 1
Devlin – Pegasus Route 2
Core Rank
C3: High
C4: Moderate
C5: General
0 750 1,500
Feet
1:18,000
ERM
N
W
E
S
Project Location
Virginia
PA
MD
OH
WV
KY
TN
NC

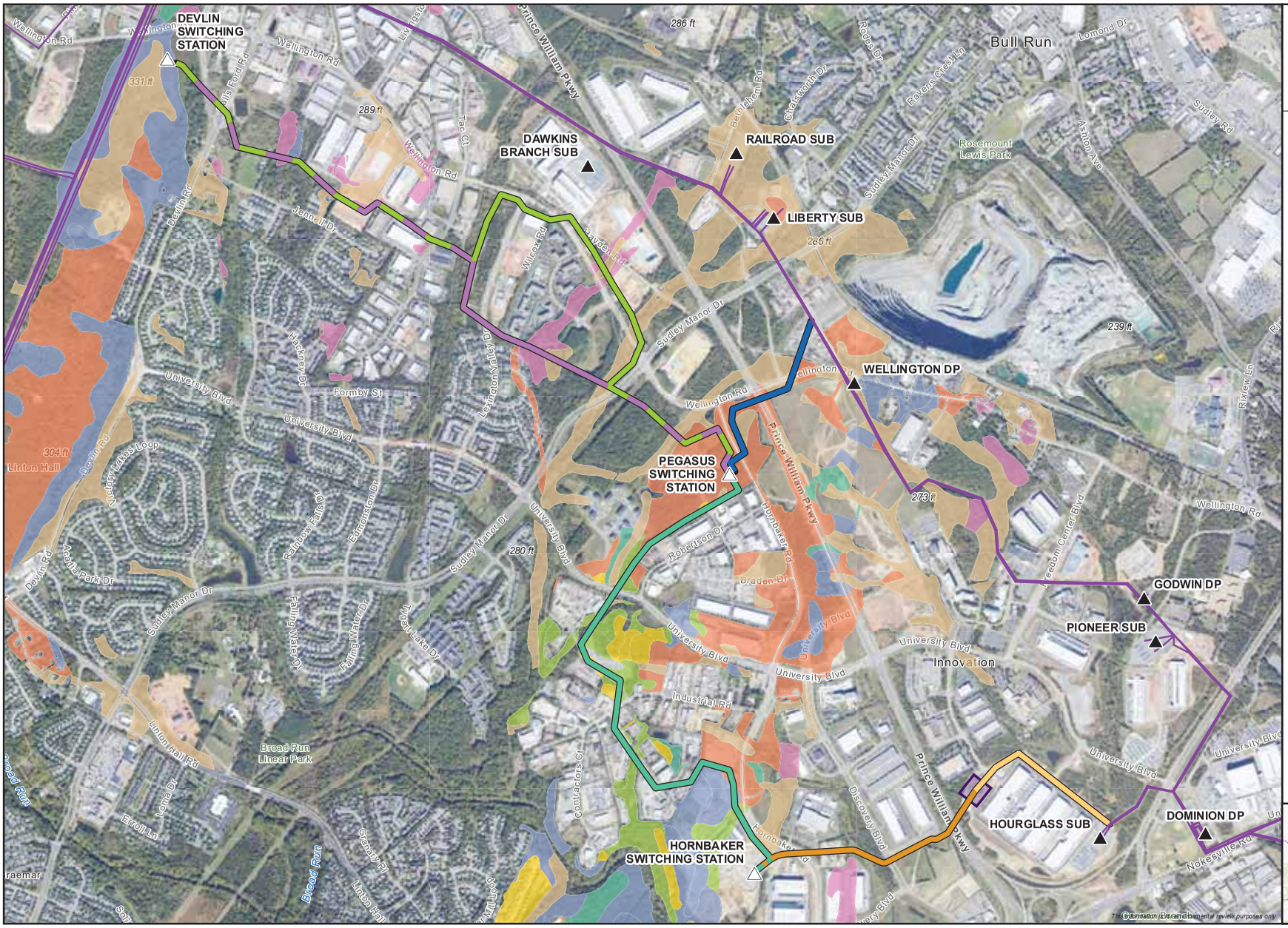

Dominion Energy

Figure 5.2-4
Diabase Soils
Hornbaker 230 kV Line Loop Project
Dominion Energy
Prince William County, Virginia

- Existing Substation
- Proposed Switching Station
- Existing Dominion Transmission Line
- Wellington – Pegasus Route 1
- Pegasus – Hornbaker Route 1
- Hourglass – Hornbaker Route 1 (Overhead)
- Hourglass – Hornbaker Route 1 (Underground)
- Proposed Transition Station
- Devlin – Pegasus Route 1
- Devlin – Pegasus Route 2

DCR Diabase Soils

- Haymarket Silt Loam
- Jackland Silt Loam
- Jackland-Haymarket Complex
- Kelly Silt Loam
- Legore-Oakhill Complex
- Montalto Silty Clay Loam
- Waxpool Silt Loam

0 750 1,500
Feet

1:18,000

ERM

N W E S

The Commission Environmental review purposes only.

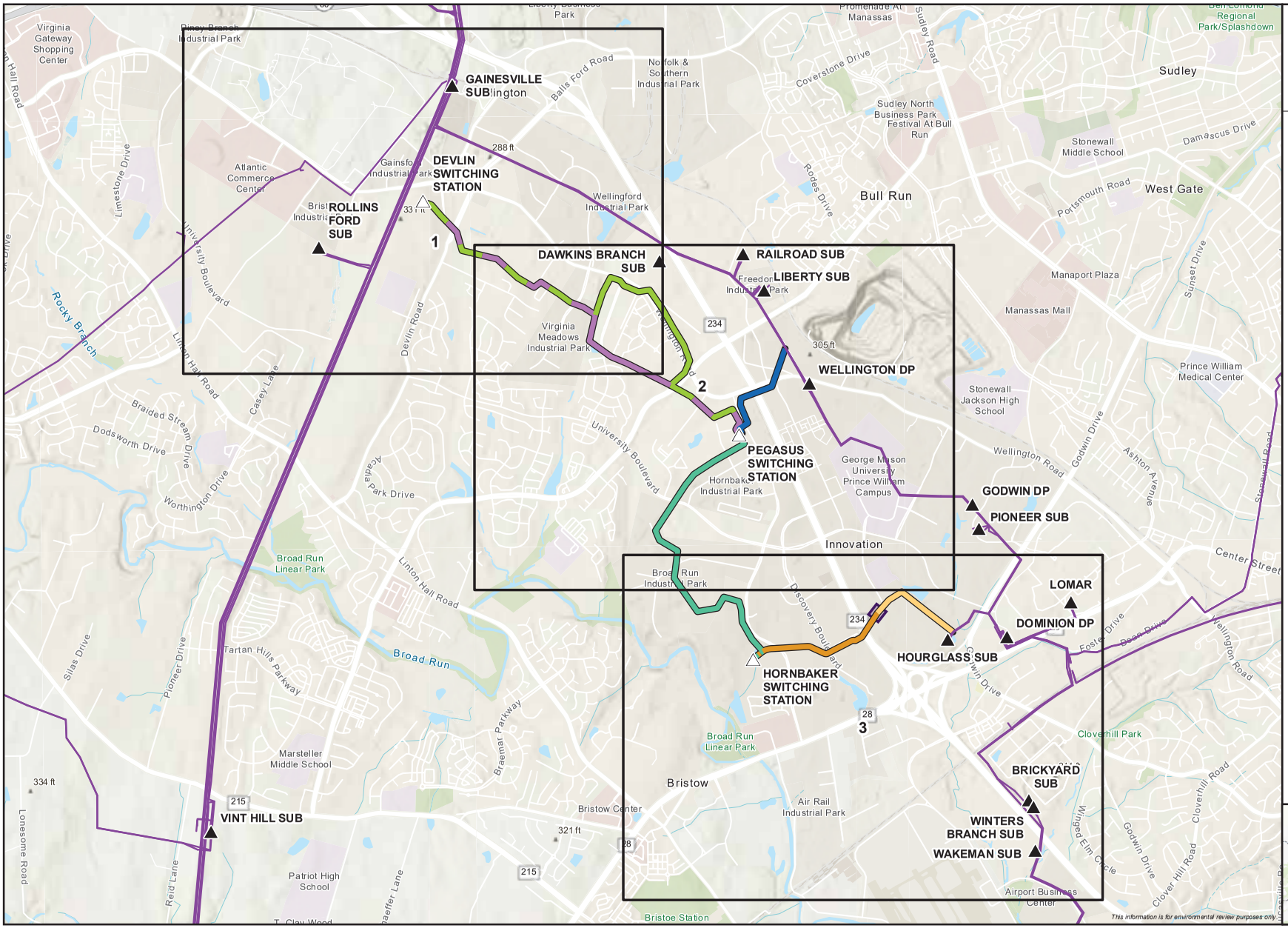

Dominion Energy

Figure 5.3-1
Visually Sensitive Resources Index
Hornbaker 230 kV Line Loop Project
Dominion Energy

Prince William County, Virginia

Page 0 of 3

- Existing Substation
- Proposed Switching Station
- Existing Dominion Transmission Line
- Wellington – Pegasus Route 1
- Pegasus – Hornbaker Route 1
- Hourglass – Hornbaker Route 1 (Overhead)
- Hourglass – Hornbaker Route 1 (Underground)
- Proposed Transition Station
- Devlin – Pegasus Route 1
- Devlin – Pegasus Route 2
- Index Page

0 1,500 3,000 Feet

1:32,000

ERM

N W E S

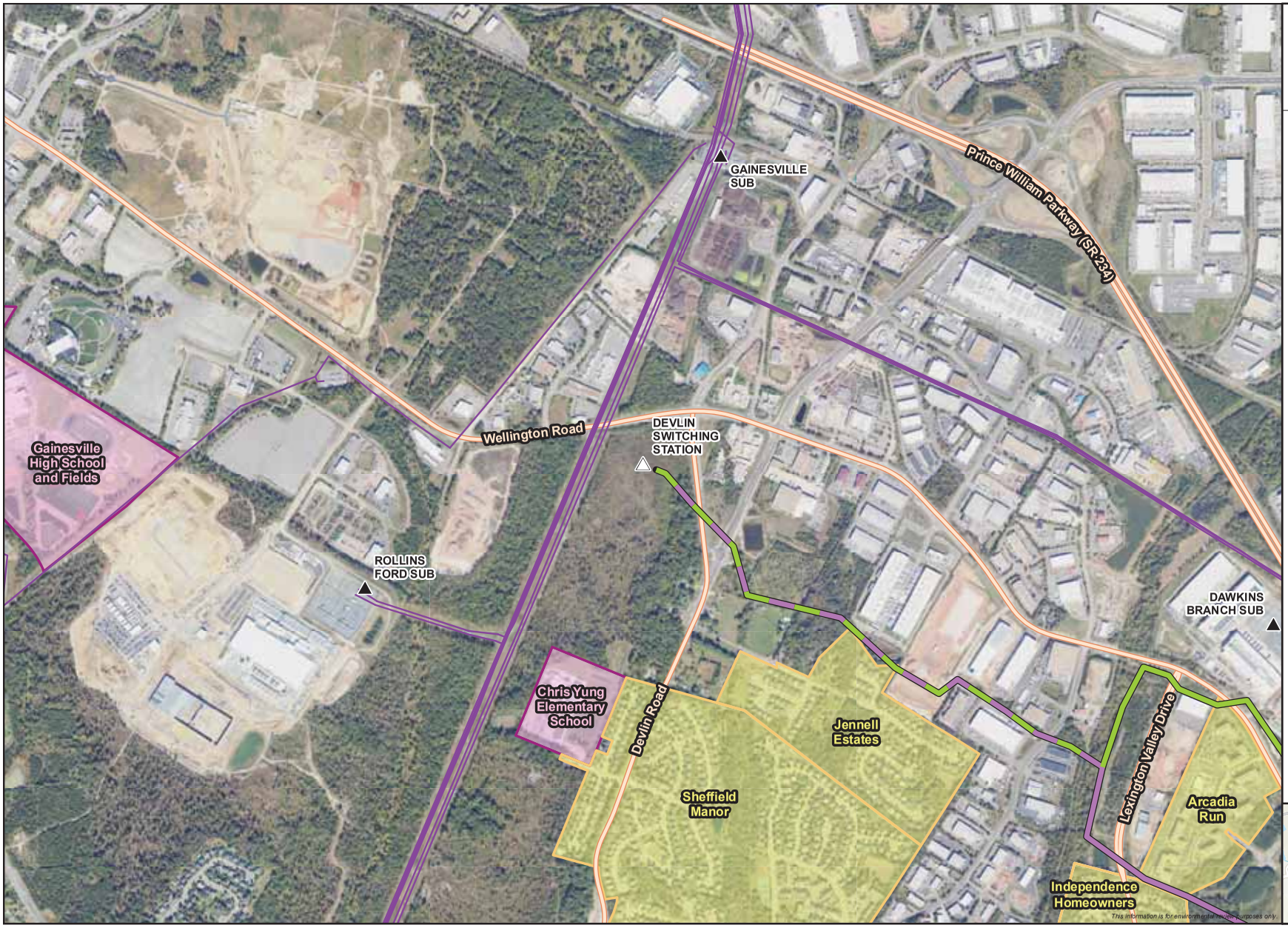

Dominion Energy

Figure 5.3-1
Visually Sensitive Resources
Hornbaker 230 kV Line Loop Project
Dominion Energy

Prince William County, Virginia

Page 1 of 3

- Existing Substation
- Proposed Switching Station
- Existing Dominion Transmission Line
- Devlin – Pegasus Route 1
- Devlin – Pegasus Route 2

Visual Resource

- Primary Road Corridor
- Educational Resource
- Residential Neighborhoods & Areas of High Public Concentration

0 500 1,000 Feet

1:12,000

ERM

N W E S

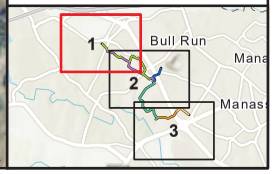

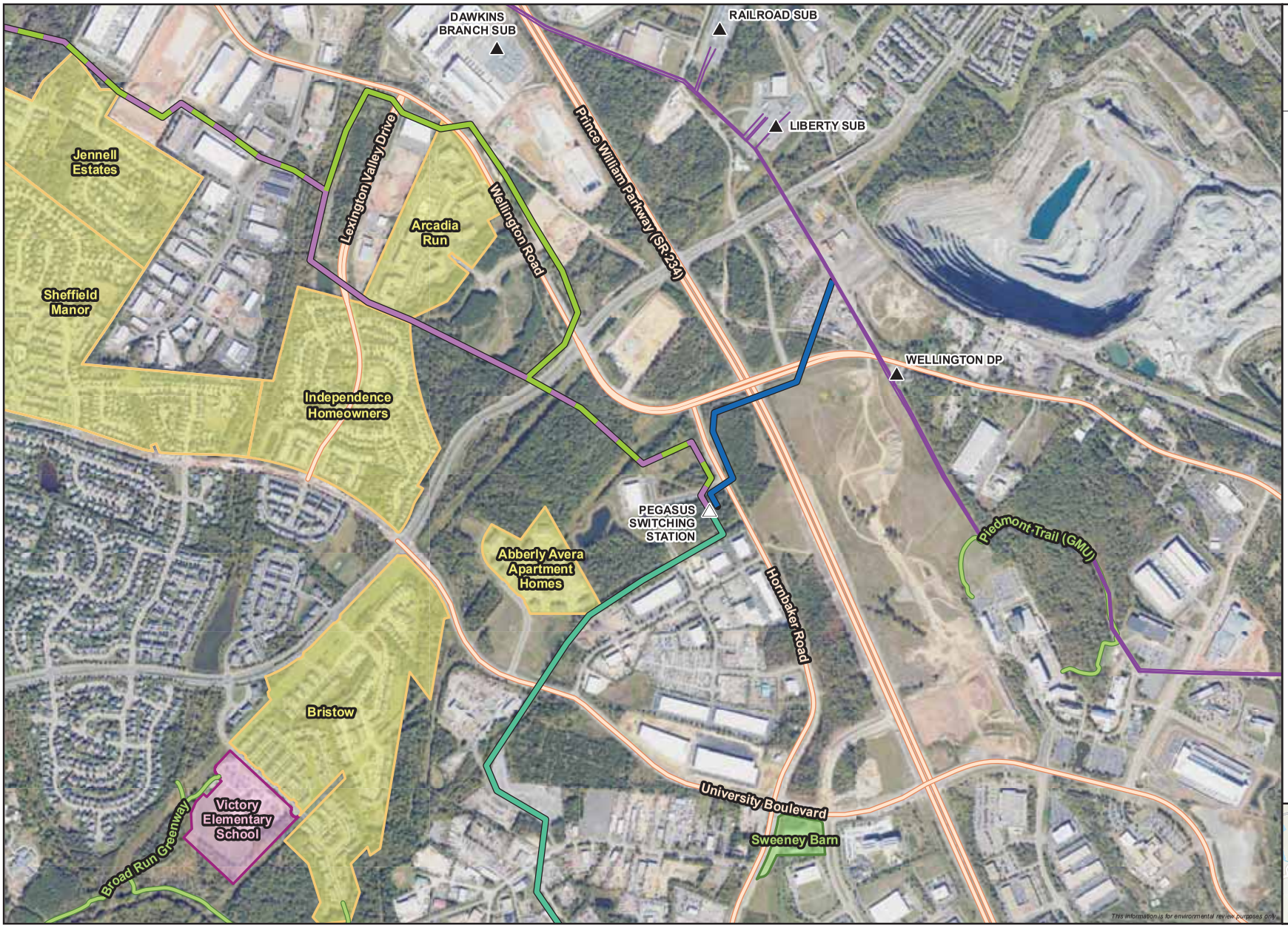

Dominion Energy

Figure 5.3-1
Visually Sensitive Resources
Hornbaker 230 kV Line Loop Project
Dominion Energy
Prince William County, Virginia
Page 2 of 3

- Existing Substation
- Proposed Switching Station
- Existing Dominion Transmission Line
- Wellington – Pegasus Route 1
- Pegasus – Hornbaker Route 1
- Devlin – Pegasus Route 1
- Devlin – Pegasus Route 2

Visual Resource

- Primary Road Corridor
- Recreational Resource
- Educational Resource
- Recreational Resource
- Residential Neighborhoods & Areas of High Public Concentration

0 500 1,000
Feet

1:12,000

ERM

N W E S

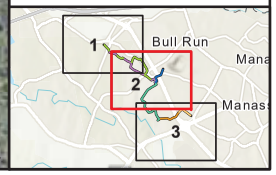


Sweeney Barn
Hornbaker Road
University Boulevard
LOMAR
HOURGLASS SUB
DOMINION DP
EG Smith Baseball Complex
Rose Hill Cemetery
HORNBAKER SWITCHING STATION
Brentsville Hall
Regency Apartment Homes
Nokesville Road
Broad Run Greenway
Cannon Branch Fort
Prince William Parkway (SR 234)
BRICKYARD SUB
WINTERS BRANCH SUB
WAKEMAN SUB
Bristow Road Scenic Byway
Dominion Energy
Figure 5.3-1
Visually Sensitive Resources
Hornbaker 230 kV Line Loop Project
Dominion Energy
Prince William County, Virginia
Page 3 of 3
Existing Substation
Proposed Switching Station
Existing Dominion Transmission Line
Pegasus – Hornbaker Route 1
Hourglass – Hornbaker Route 1 (Overhead)
Hourglass – Hornbaker Route 1 (Underground)
Proposed Transition Station
Visual Resource
Primary Road Corridor
Scenic Resource
Recreational Resource
Places of Worship & Cemeteries
Recreational Resource
Residential Neighborhoods & Areas of High Public Concentration
0 500 1,000
Feet
1:12,000
ERM
N
W
E
S
1
2
3
Bull Run
Manas
This information is for environmental review purposes only.

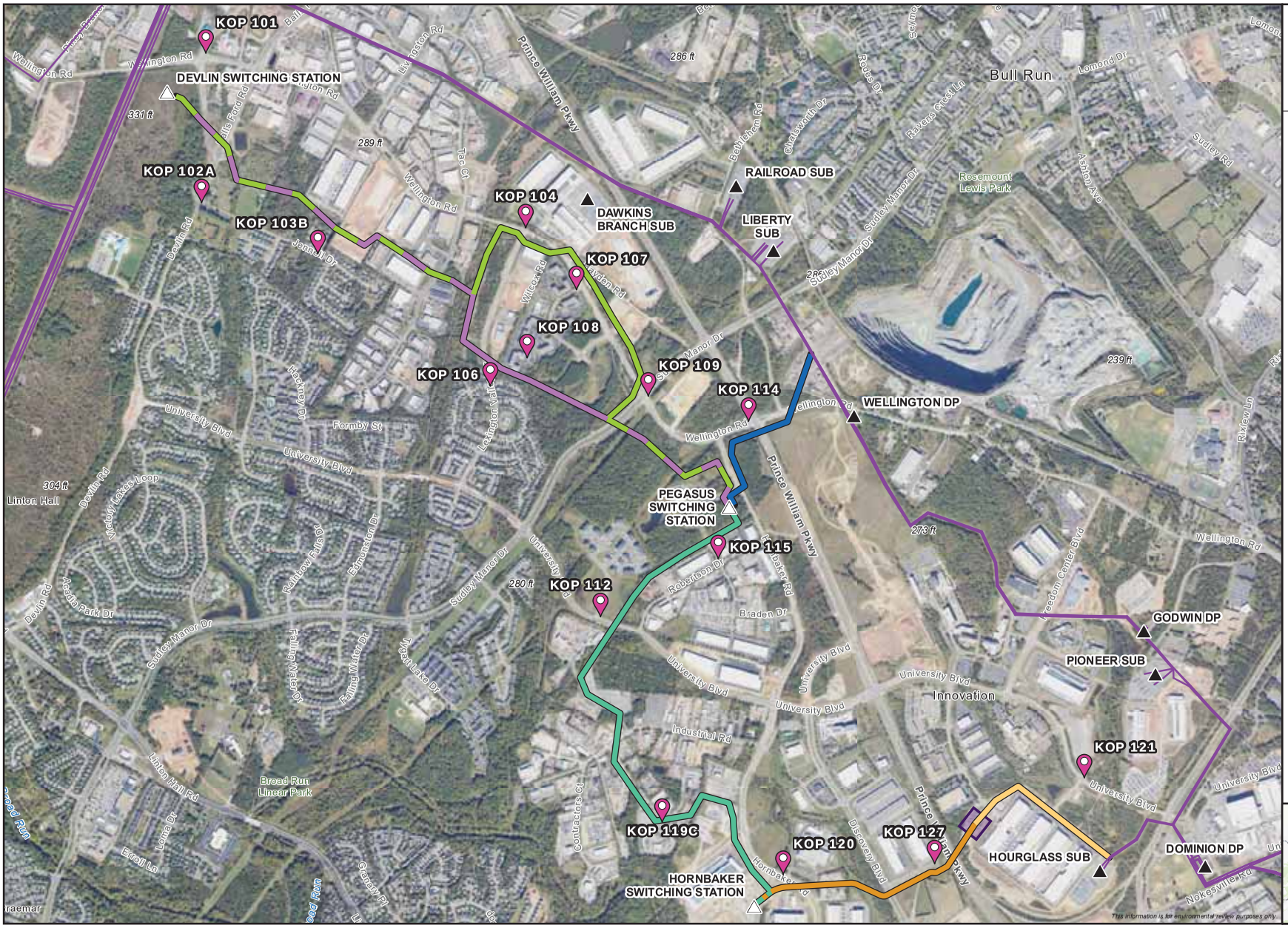

Dominion Energy

Figure 5.3-2
Key Observation Points
Hornbaker 230 kV Line Loop Project
Dominion Energy
Prince William County, Virginia

- Existing Substation
- Proposed Switching Station
- Existing Dominion Transmission Line
- Wellington – Pegasus Route 1
- Pegasus – Hornbaker Route 1
- Hourglass – Hornbaker Route 1 (Overhead)
- Hourglass – Hornbaker Route 1 (Underground)
- Proposed Transition Station
- Devlin – Pegasus Route 1
- Devlin – Pegasus Route 2
- Key Observation Point

0 750 1,500
Feet
1:18,000

ERM

N W E S

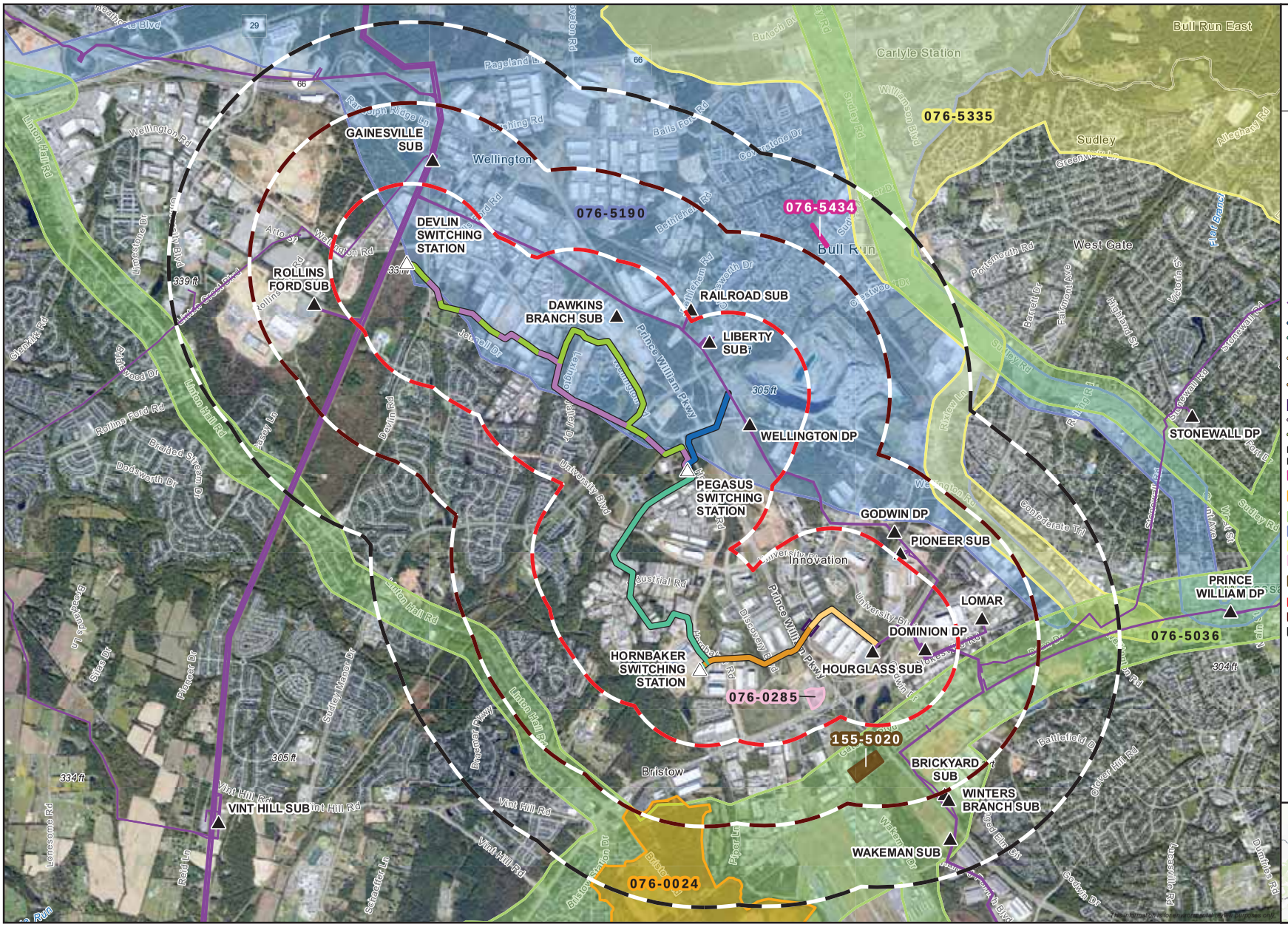

Dominion Energy

Figure 5.4-1
Historic Resources
Hornbaker 230 kV Line Loop Project
Dominion Energy
Prince William County, Virginia

- Existing Substation
- Proposed Switching Station
- Existing Dominion Transmission Line
- Wellington – Pegasus Route 1
- Pegasus – Hornbaker Route 1
- Hourglass – Hornbaker Route 1 (Overhead)
- Hourglass – Hornbaker Route 1 (Underground)
- Proposed Transition Station
- Devlin – Pegasus Route 1
- Devlin – Pegasus Route 2

Known Architecture Resource Evaluation Status

- 076-5434 - Unevaluated
- 076-0024 - VLR Listing Removed
- 076-5036 - Potentially Eligible
- 076-5190 - Potentially Eligible
- 076-5335 - Potentially Eligible
- 076-0285 - Eligible
- 155-5020 - NRHP Listing, VLR Listing
- 0.5 - Mile Buffer
- 1.0 - Mile Buffer
- 1.5 - Mile Buffer

0 1,500 3,000
Feet

1:36,000

ERM

N S E W

Project Location
Virginia

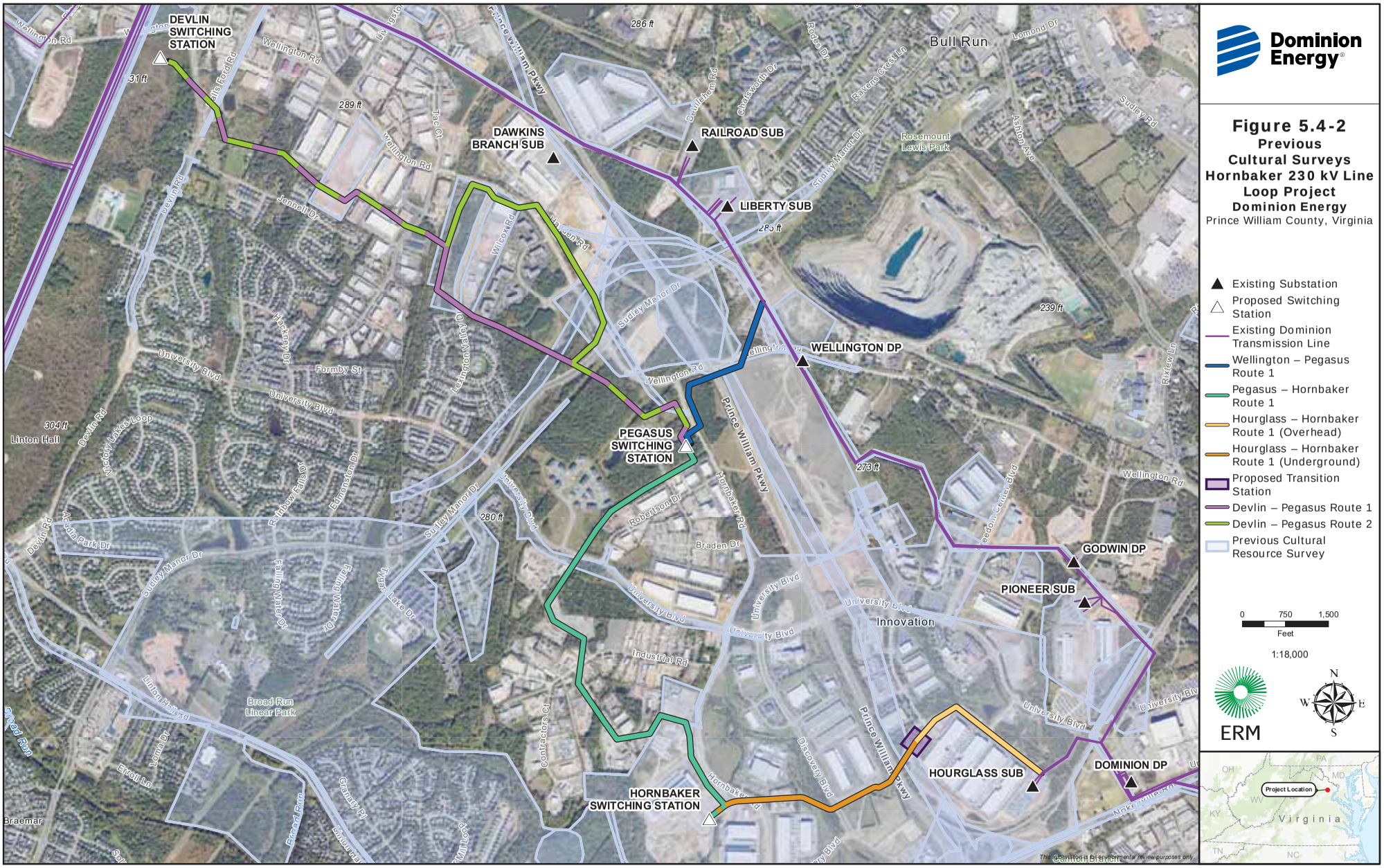
DEVLIN SWITCHING STATION
DAWKINS BRANCH SUB
RAILROAD SUB
LIBERTY SUB
WELLINGTON DP
PEGASUS SWITCHING STATION
GODWIN DP
PIONEER SUB
HOURGLASS SUB
DOMINION DP
HORNBAKER SWITCHING STATION
Bull Run
Innovation
Linton Hall
Broad Run Linear Park
Rosemount Lewis Park
Prince William Pkwy
Wellington Rd
University Blvd
Sudley Manor Dr
Devlin Rd
Braden Rd
Hornbaker Rd
Discovery Blvd
Industrial Rd
Contractors Ct
Lexington Valley Dr
Wellington Ridge Dr
Fairing Way Dr
Fairing Way Ct
Fairing Way Pl
Edmonston Dr
Robertson Dr
Braden Dr
Jennell Dr
Wilcox Rd
Formby St
Hackney Dr
Victory Lakes Loop
Rainbow Falls Dr
Veteran Park Dr
Linton Hall Rd
Lone Dr
Errol Ln
Grandy Pl
Lancaster Ln
Broad Run
Braemar
Cannon Branch
Sudley Manor Dr
Ashton Ave
Review Ln
Lomond Dr
Sudley Rd
Ravens Crest Ln
Rodes Dr
Charlesworth Dr
Devlin Rd
Wellington Rd
Prince William Pkwy
Nokesville Rd
286 ft
289 ft
285 ft
239 ft
273 ft
280 ft
304 ft
Dominion Energy
Figure 5.4-2
Previous Cultural Surveys
Hornbaker 230 kV Line Loop Project
Dominion Energy
Prince William County, Virginia
Existing Substation
Proposed Switching Station
Existing Dominion Transmission Line
Wellington – Pegasus Route 1
Pegasus – Hornbaker Route 1
Hourglass – Hornbaker Route 1 (Overhead)
Hourglass – Hornbaker Route 1 (Underground)
Proposed Transition Station
Devlin – Pegasus Route 1
Devlin – Pegasus Route 2
Previous Cultural Resource Survey
0 750 1,500
Feet
1:18,000
ERM
N
W
E
S
PA
OH
MD
WV
KY
Virginia
TN
NC
Project Location
The Cannon Branch is for environmental review purposes only.

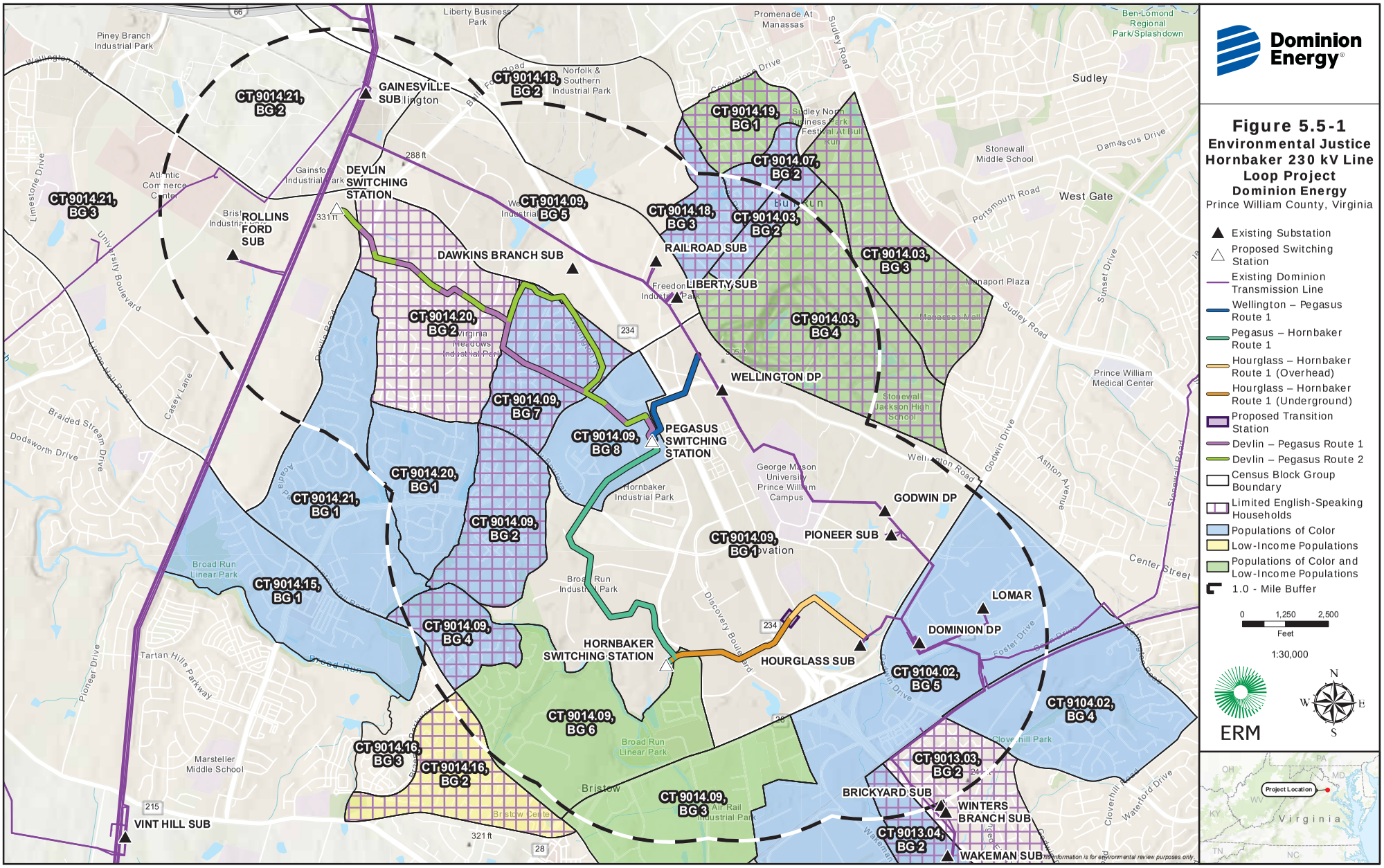
Dominion Energy
Figure 5.5-1
Environmental Justice
Hornbaker 230 kV Line
Loop Project
Dominion Energy
Prince William County, Virginia
Existing Substation
Proposed Switching Station
Existing Dominion Transmission Line
Wellington – Pegasus Route 1
Pegasus – Hornbaker Route 1
Hourglass – Hornbaker Route 1 (Overhead)
Hourglass – Hornbaker Route 1 (Underground)
Proposed Transition Station
Devlin – Pegasus Route 1
Devlin – Pegasus Route 2
Census Block Group Boundary
Limited English-Speaking Households
Populations of Color
Low-Income Populations
Populations of Color and Low-Income Populations
1.0 - Mile Buffer
0 1,250 2,500
Feet
1:30,000
ERM
N
S
E
W
GAINESVILLE SUB
DEVLIN SWITCHING STATION
ROLLINS FORD SUB
DAWKINS BRANCH SUB
RAILROAD SUB
LIBERTY SUB
WELLINGTON DP
PEGASUS SWITCHING STATION
GODWIN DP
PIONEER SUB
LOMAR
DOMINION DP
HOURGLASS SUB
HORNBAKER SWITCHING STATION
BRICKYARD SUB
WINTERS BRANCH SUB
WAKEMAN SUB
VINT HILL SUB
CT 9014.21, BG 2
CT 9014.21, BG 3
CT 9014.18, BG 2
CT 9014.19, BG 1
CT 9014.07, BG 2
CT 9014.18, BG 3
CT 9014.03, BG 2
CT 9014.09, BG 5
CT 9014.03, BG 3
CT 9014.03, BG 4
CT 9014.20, BG 2
CT 9014.09, BG 7
CT 9014.09, BG 8
CT 9014.20, BG 1
CT 9014.21, BG 1
CT 9014.09, BG 2
CT 9014.09, BG 1
CT 9014.15, BG 1
CT 9014.09, BG 4
CT 9014.09, BG 6
CT 9014.16, BG 3
CT 9014.16, BG 2
CT 9014.09, BG 3
CT 9104.02, BG 5
CT 9104.02, BG 4
CT 9013.03, BG 2
CT 9013.04, BG 2
Project Location
Virginia
This information is for environmental review purposes only.

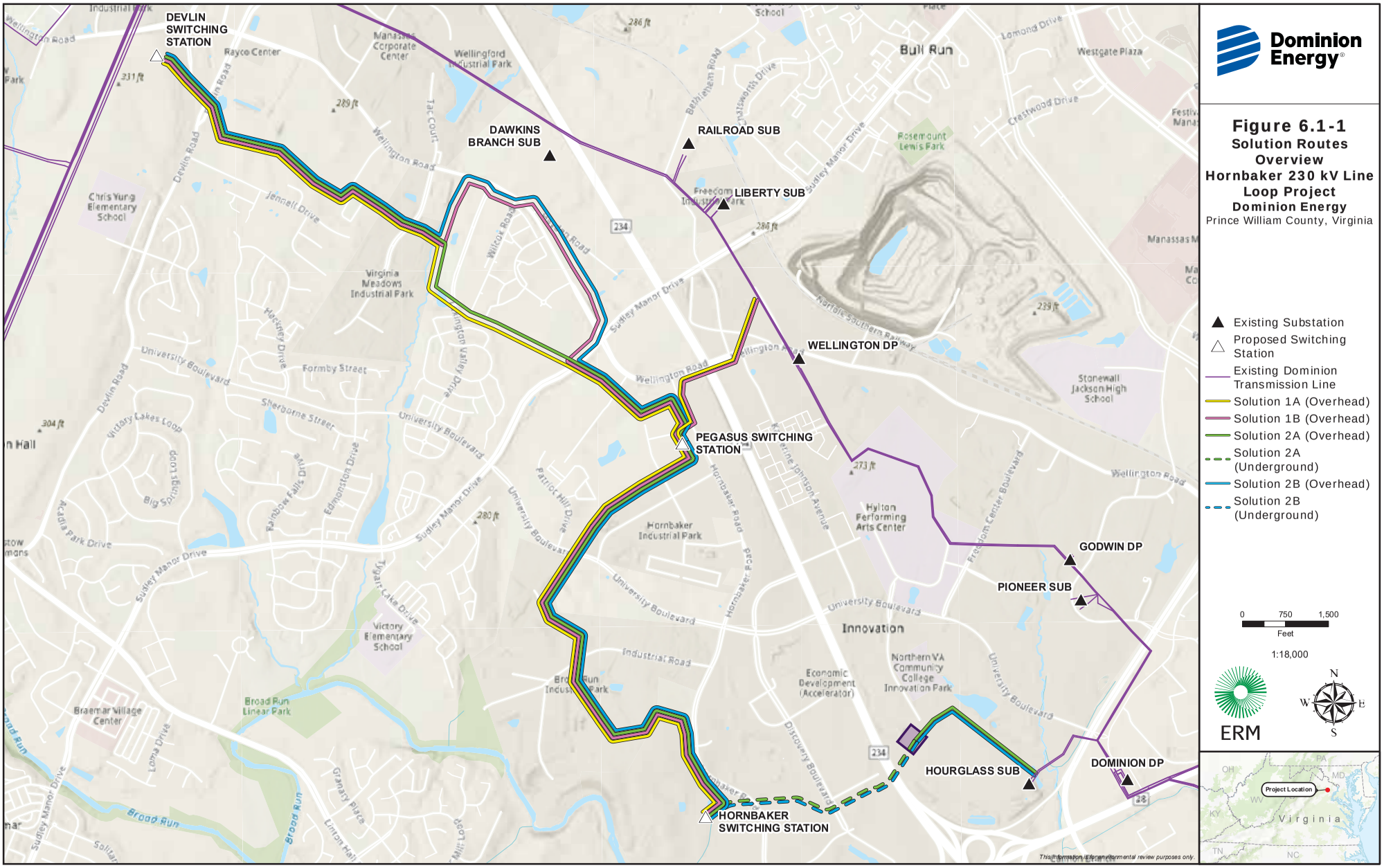

Dominion Energy

Figure 6.1-1
Solution Routes Overview
Hornbaker 230 kV Line Loop Project
Dominion Energy
Prince William County, Virginia

- Existing Substation
- Proposed Switching Station
- Existing Dominion Transmission Line
- Solution 1A (Overhead)
- Solution 1B (Overhead)
- Solution 2A (Overhead)
- Solution 2A (Underground)
- Solution 2B (Overhead)
- Solution 2B (Underground)

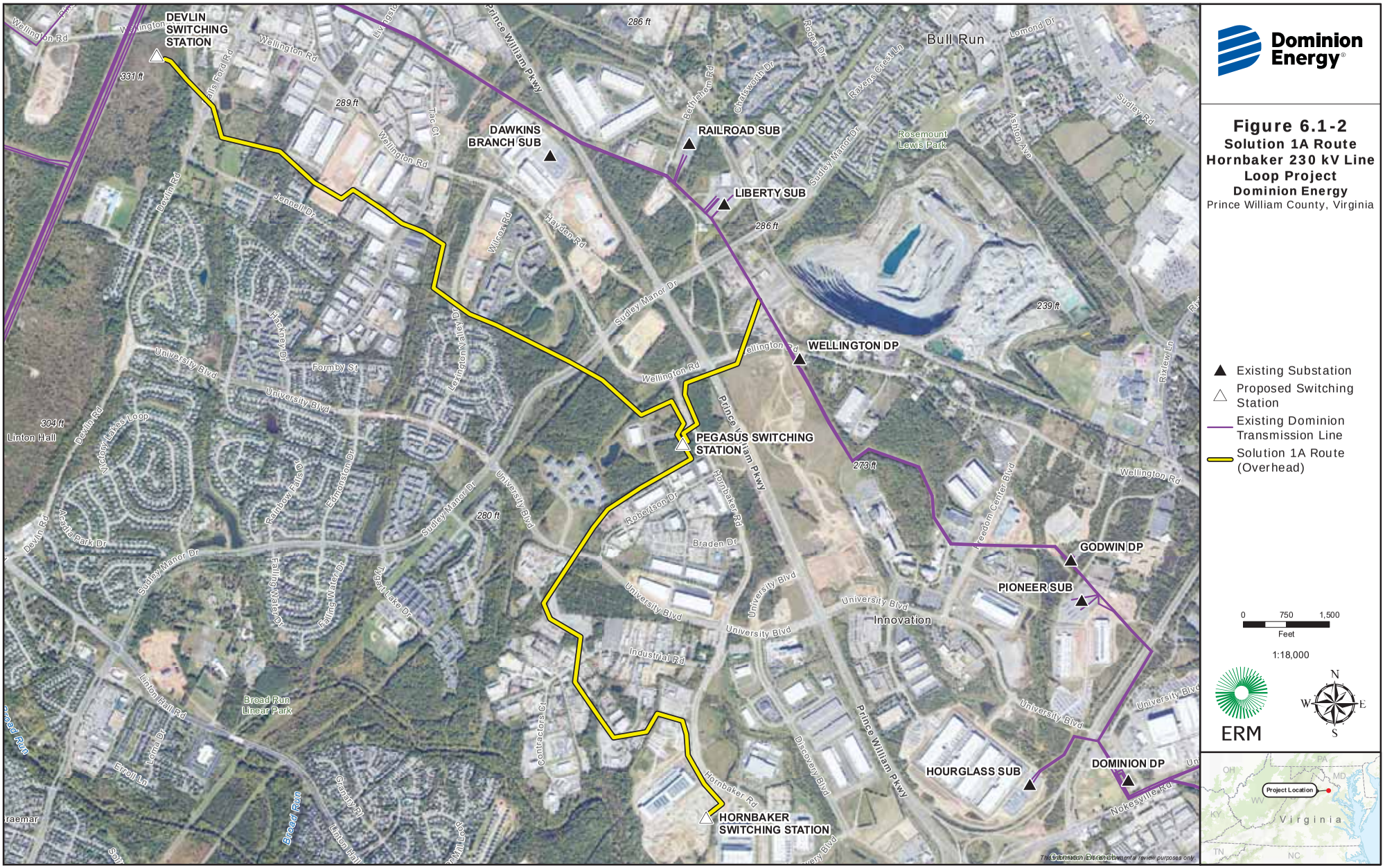

Dominion Energy

Figure 6.1-2
Solution 1A Route
Hornbaker 230 kV Line
Loop Project
Dominion Energy
Prince William County, Virginia

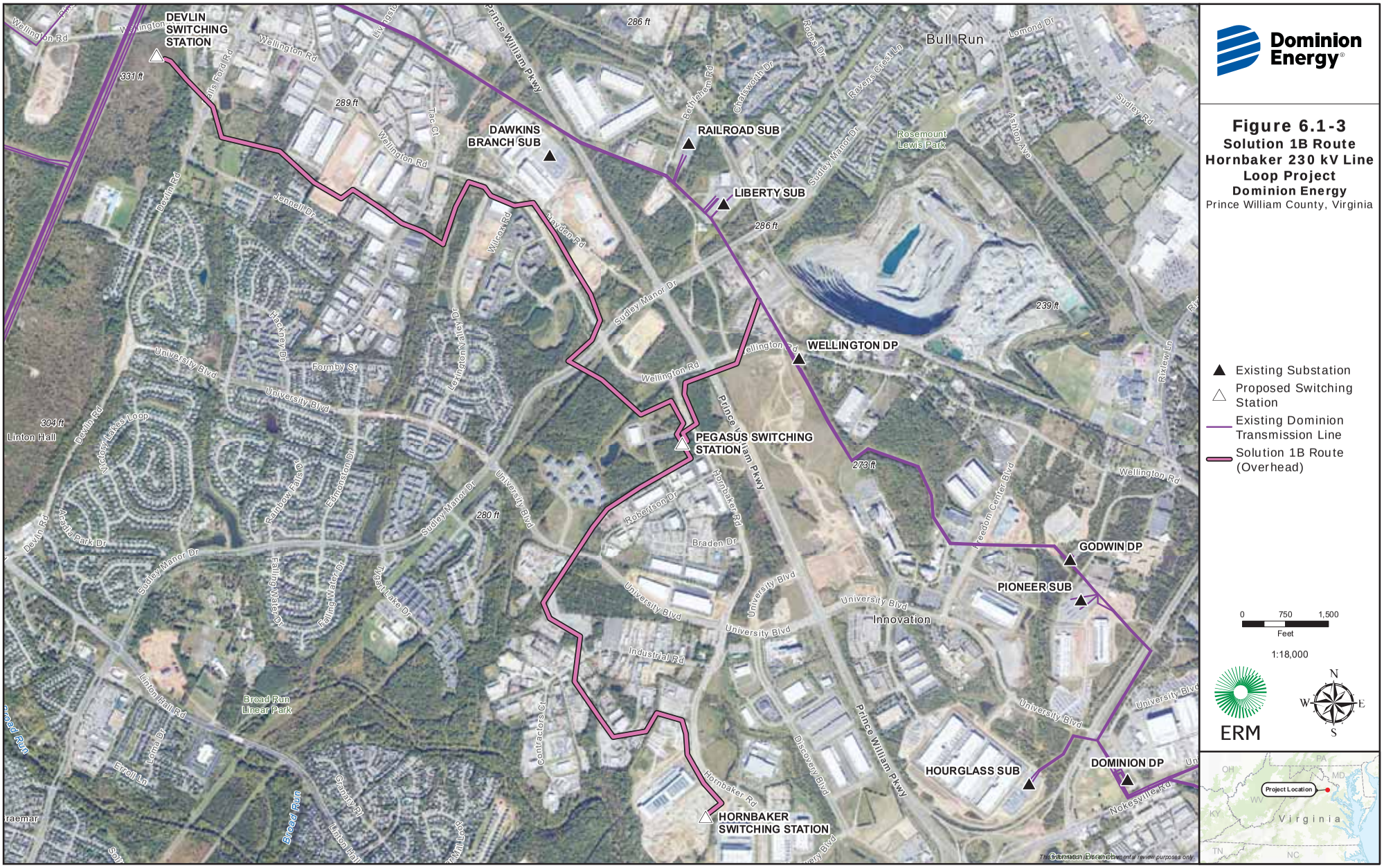

Dominion Energy

Figure 6.1-3
Solution 1B Route
Hornbaker 230 kV Line
Loop Project
Dominion Energy
Prince William County, Virginia

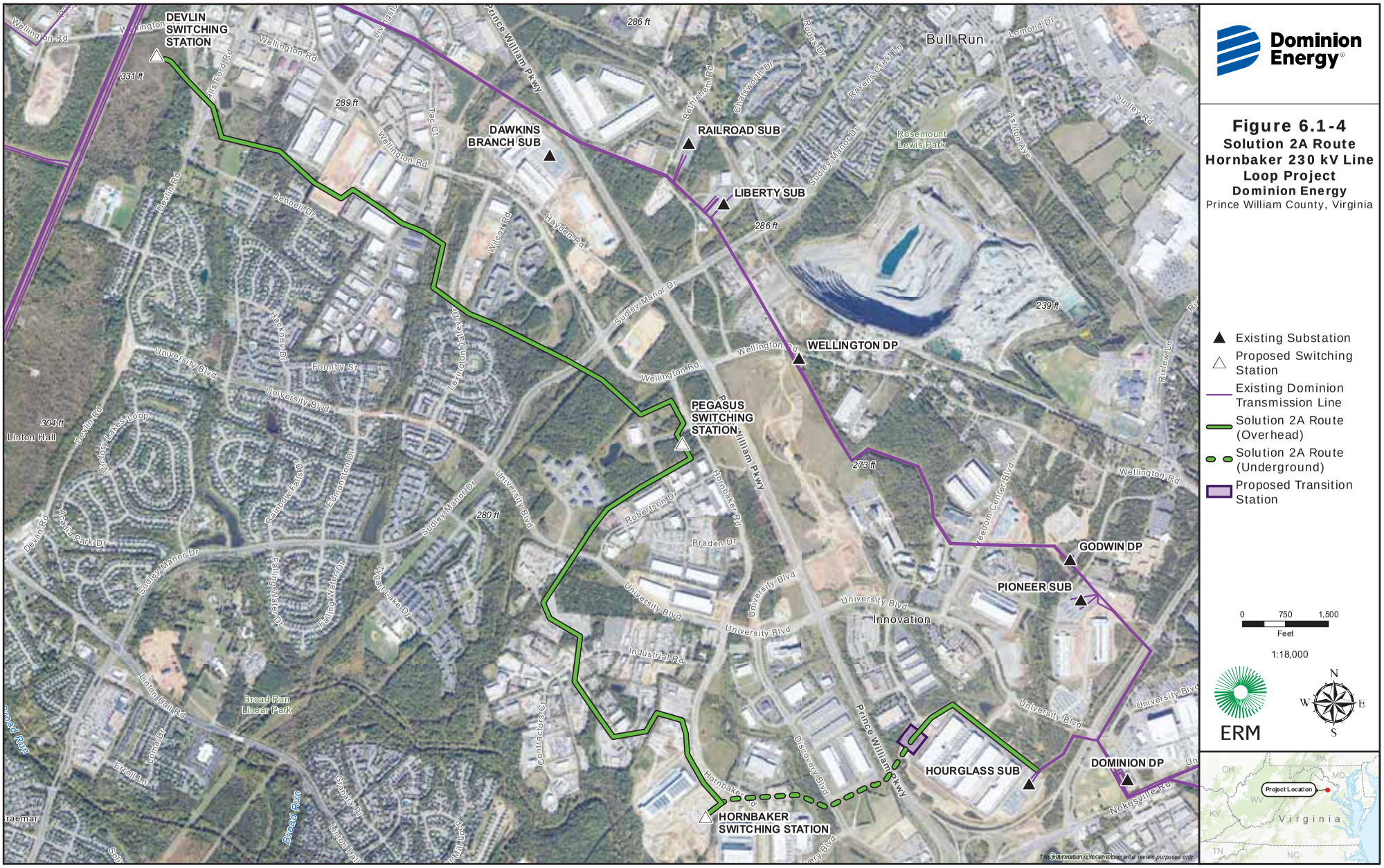

Figure 6.1-4
Solution 2A Route
Hornbaker 230 kV Line Loop Project
Dominion Energy
Prince William County, Virginia

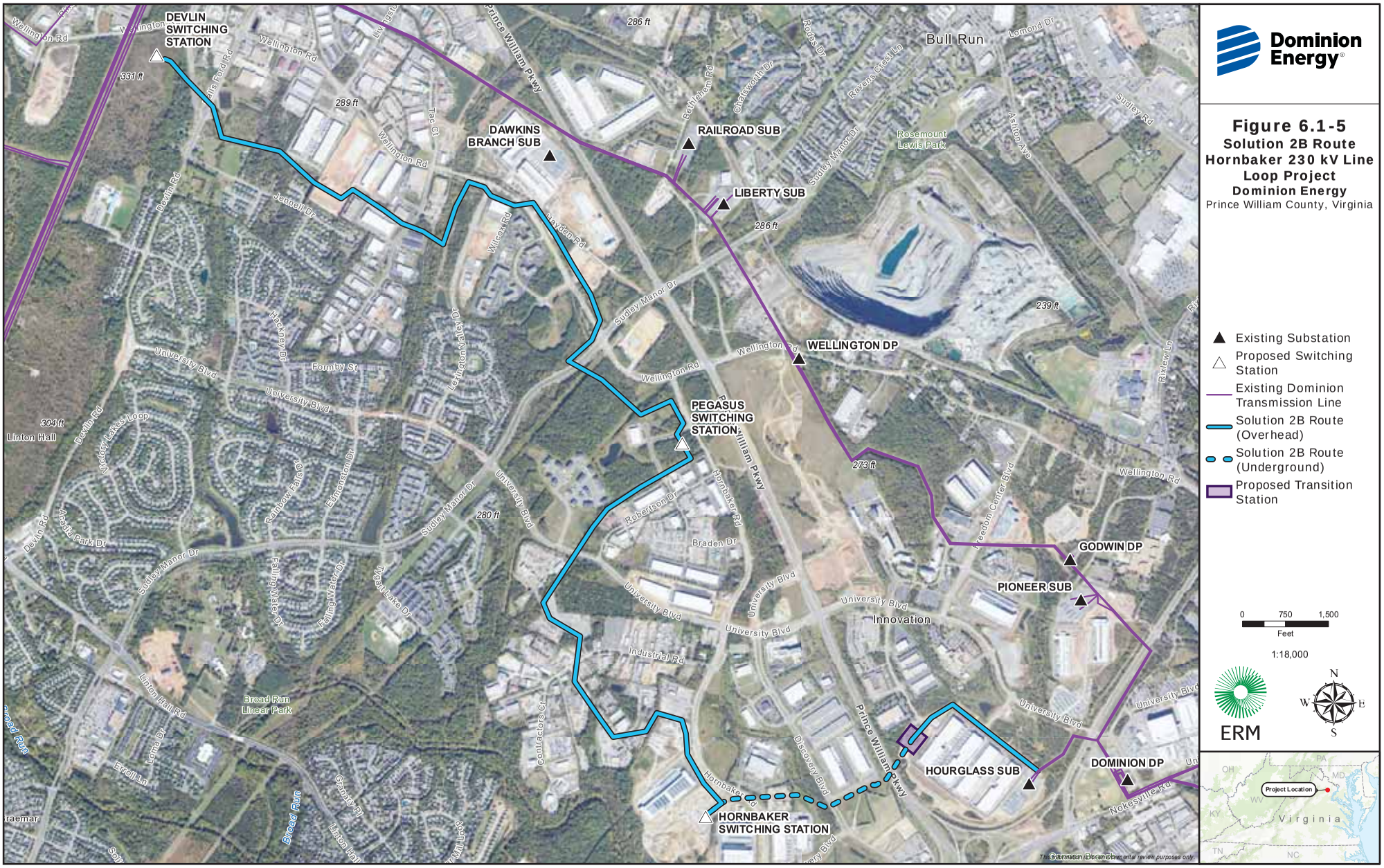

Dominion Energy

Figure 6.1-5
Solution 2B Route
Hornbaker 230 kV Line
Loop Project
Dominion Energy
Prince William County, Virginia

APPENDIX B STRUCTURAL DRAWINGS

WELLINGTON TO PEGASUS ROUTE 1

SECTION 1
SOLUTION 1B

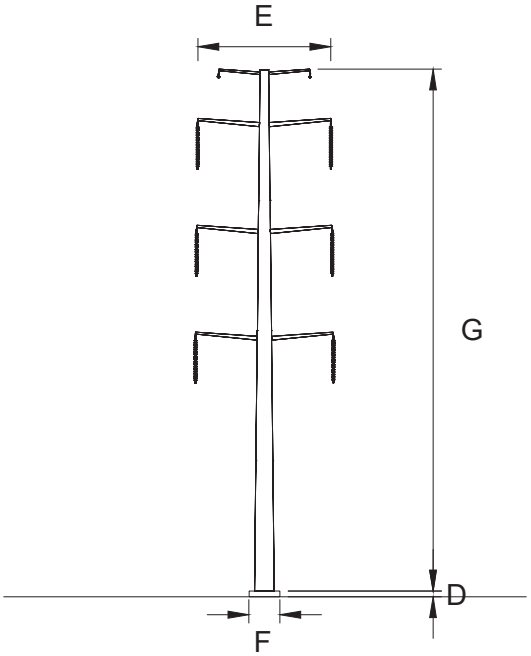

DOUBLE CIRCUIT DEADEND STEEL MONOPOLE STRUCTURE

A. RATIONALE FOR STRUCTURE TYPE:	STRUCTURES ARE TO ACCOMMODATE TWO CIRCUITS
B. LENGTH OF R/W (STRUCTURE QUANTITY):	0.64 MILES (5 STRUCTURES)
C. STRUCTURE MATERIAL:	GALVANIZED STEEL
RATIONALE FOR STRUCTURE MATERIAL:	GALVANIZED STEEL WAS SELECTED TO MATCH NEARBY EXISTING STRUCTURES.
D. FOUNDATION MATERIAL:	CONCRETE
AVERAGE FOUNDATION REVEAL:	SEE NOTE 4
E. AVERAGE WIDTH AT CROSSARM:	27.5'
F. AVERAGE WIDTH AT BASE:	7.5' - 10' DIAMETER FOUNDATION (SEE NOTE 1)
G. MINIMUM STRUCTURE HEIGHT:	100'
MAXIMUM STRUCTURE HEIGHT:	120'
AVERAGE STRUCTURE HEIGHT:	108'
H. AVERAGE SPAN LENGTH:	500'
I. MINIMUM CONDUCTOR-TO-GROUND:	25.5' (AT MAXIMUM OPERATING TEMPERATURE)

NOTES

1. INFORMATION ON DRAWING IS PRELIMINARY AND SUBJECT TO CHANGE DURING FINAL ENGINEERING
2. INDIVIDUAL POLE HEIGHTS ABOVE GROUND MAY VARY SUBJECT TO FINAL LOCATION AND TERRAIN
3. STRUCTURE HEIGHTS ARE MEASURED FROM STRUCTURE CENTERLINE
4. MINIMUM FOUNDATION REVEAL SHALL BE 1.5', MAX REVEAL SUBJECT TO FINAL LOCATION AND TERRAIN
5. THE AVERAGE SPAN LENGTH LISTED IS BASED ON THE ENTIRE ROW LISTED IN LINE (B)

Electric Transmission

Dominion Energy
5000 Dominion Blvd
Glen Allen, VA 23060

SECTION 1 - SOLUTION 1B
DOUBLE CIRCUIT DEADEND STEEL
MONOPOLE STRUCTURES

ATTACHMENT NO.

DRAWN BY: CBW

WELLINGTON TO PEGASUS ROUTE 1

SECTION 2
SOLUTION 1B

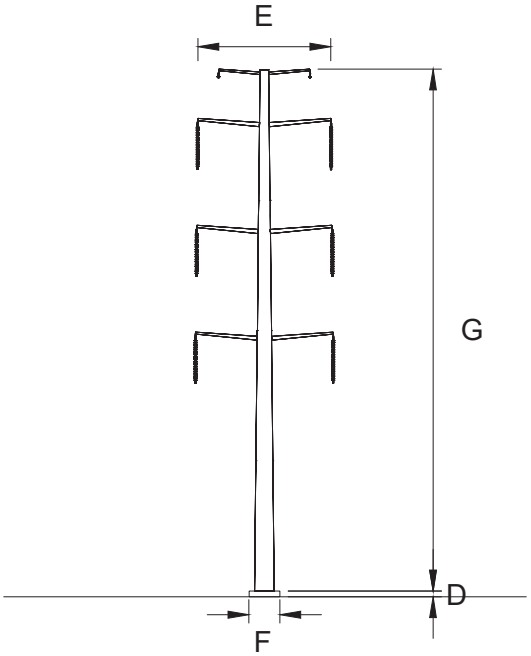

DOUBLE CIRCUIT SUSPENSION STEEL MONOPOLE STRUCTURE

A. RATIONALE FOR STRUCTURE TYPE:	STRUCTURES ARE TO ACCOMMODATE TWO CIRCUITS
B. LENGTH OF R/W (STRUCTURE QUANTITY):	0.64 MILES (1 STRUCTURES)
C. STRUCTURE MATERIAL:	GALVANIZED STEEL
RATIONALE FOR STRUCTURE MATERIAL:	GALVANIZED STEEL WAS SELECTED TO MATCH NEARBY EXISTING STRUCTURES.
D. FOUNDATION MATERIAL:	CONCRETE
AVERAGE FOUNDATION REVEAL:	SEE NOTE 4
E. AVERAGE WIDTH AT CROSSARM:	27.5'
F. AVERAGE WIDTH AT BASE:	6' DIAMETER FOUNDATION (SEE NOTE 1)
G. MINIMUM STRUCTURE HEIGHT:	135'
MAXIMUM STRUCTURE HEIGHT:	135'
AVERAGE STRUCTURE HEIGHT:	135'
H. AVERAGE SPAN LENGTH:	500'
I. MINIMUM CONDUCTOR-TO-GROUND:	25.5' (AT MAXIMUM OPERATING TEMPERATURE)

NOTES

1. INFORMATION ON DRAWING IS PRELIMINARY AND SUBJECT TO CHANGE DURING FINAL ENGINEERING
2. INDIVIDUAL POLE HEIGHTS ABOVE GROUND MAY VARY SUBJECT TO FINAL LOCATION AND TERRAIN
3. STRUCTURE HEIGHTS ARE MEASURED FROM STRUCTURE CENTERLINE
4. MINIMUM FOUNDATION REVEAL SHALL BE 1.5', MAX REVEAL SUBJECT TO FINAL LOCATION AND TERRAIN
5. THE AVERAGE SPAN LENGTH LISTED IS BASED ON THE ENTIRE ROW LISTED IN LINE (B)

Electric Transmission

Dominion Energy
5000 Dominion Blvd
Glen Allen, VA 23060

SECTION 2 - SOLUTION 1B
DOUBLE CIRCUIT SUSPENSION
STEEL MONOPOLE STRUCTURES

ATTACHMENT NO.

DRAWN BY: CBW

WELLINGTON TO PEGASUS ROUTE 1

SECTION 3
SOLUTION 1B

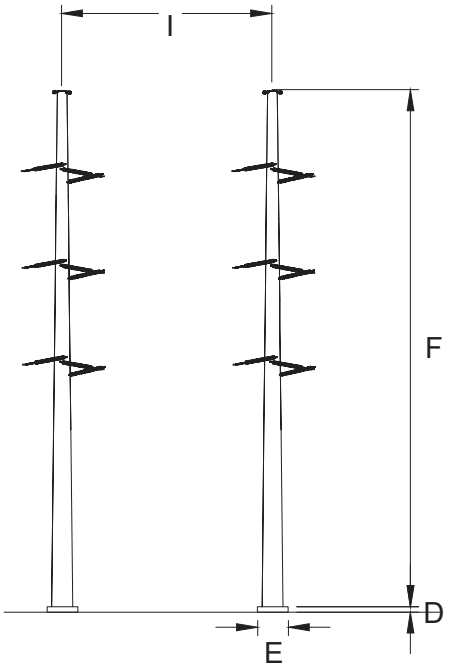

DOUBLE CIRCUIT DEADEND STEEL 2-POLE

A. RATIONALE FOR STRUCTURE TYPE:	STRUCTURES ARE TO ACCOMMODATE TWO CIRCUITS
B. LENGTH OF R/W (STRUCTURE QUANTITY):	0.64 MILES (1 STRUCTURES)
C. STRUCTURE MATERIAL:	GALVANIZED STEEL
RATIONALE FOR STRUCTURE MATERIAL:	GALVANIZED STEEL WAS SELECTED TO MATCH NEARBY EXISTING STRUCTURES.
D. FOUNDATION MATERIAL:	CONCRETE
AVERAGE FOUNDATION REVEAL:	SEE NOTE 4
E. AVERAGE WIDTH AT BASE:	9.5' DIAMETER FOUNDATION (SEE NOTE 1)
F. MINIMUM STRUCTURE HEIGHT:	115'
MAXIMUM STRUCTURE HEIGHT:	115'
AVERAGE STRUCTURE HEIGHT:	115'
G. AVERAGE SPAN LENGTH:	500'
H. MINIMUM CONDUCTOR-TO-GROUND:	25.5' (AT MAXIMUM OPERATING TEMPERATURE)
I. AVERAGE DISTANCE BETWEEN POLES:	34'

NOTES

1. INFORMATION ON DRAWING IS PRELIMINARY AND SUBJECT TO CHANGE DURING FINAL ENGINEERING
2. INDIVIDUAL POLE HEIGHTS ABOVE GROUND MAY VARY SUBJECT TO FINAL LOCATION AND TERRAIN
3. STRUCTURE HEIGHTS ARE MEASURED FROM STRUCTURE CENTERLINE
4. MINIMUM FOUNDATION REVEAL SHALL BE 1.5', MAX REVEAL SUBJECT TO FINAL LOCATION AND TERRAIN
5. THE AVERAGE SPAN LENGTH LISTED IS BASED ON THE ENTIRE ROW LISTED IN LINE (B)

Electric Transmission

Dominion Energy
5000 Dominion Blvd
Glen Allen, VA 23060

SECTION 3 - SOLUTION 1B
DOUBLE CIRCUIT DEADEND STEEL
2-POLE STRUCTURE

ATTACHMENT NO.

DRAWN BY: CBW

PEGASUS TO HORNBAKER ROUTE 1

SECTION 4
SOLUTION 1B

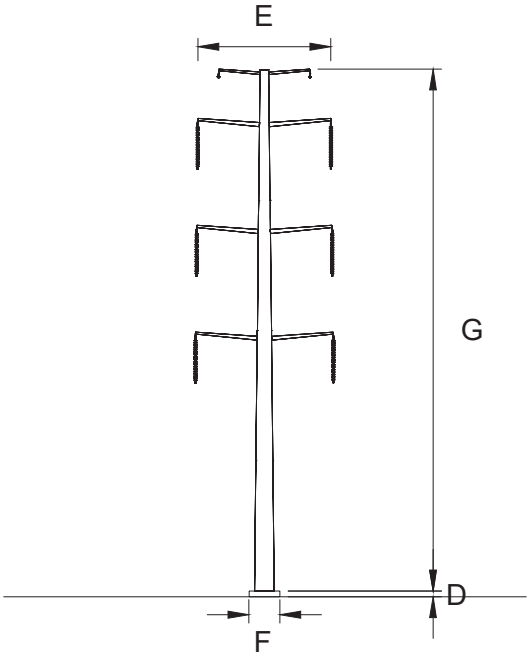

DOUBLE CIRCUIT DEADEND STEEL MONOPOLE STRUCTURE

A. RATIONALE FOR STRUCTURE TYPE:	STRUCTURES ARE TO ACCOMMODATE TWO CIRCUITS
B. LENGTH OF R/W (STRUCTURE QUANTITY):	1.90 MILES (14 STRUCTURES)
C. STRUCTURE MATERIAL:	GALVANIZED STEEL
RATIONALE FOR STRUCTURE MATERIAL:	GALVANIZED STEEL WAS SELECTED TO MATCH NEARBY EXISTING STRUCTURES.
D. FOUNDATION MATERIAL:	CONCRETE
AVERAGE FOUNDATION REVEAL:	SEE NOTE 4
E. AVERAGE WIDTH AT CROSSARM:	27.5'
F. AVERAGE WIDTH AT BASE:	7.5' - 10' DIAMETER FOUNDATION (SEE NOTE 1)
G. MINIMUM STRUCTURE HEIGHT:	95'
MAXIMUM STRUCTURE HEIGHT:	115'
AVERAGE STRUCTURE HEIGHT:	108'
H. AVERAGE SPAN LENGTH:	475'
I. MINIMUM CONDUCTOR-TO-GROUND:	25.5' (AT MAXIMUM OPERATING TEMPERATURE)

NOTES

1. INFORMATION ON DRAWING IS PRELIMINARY AND SUBJECT TO CHANGE DURING FINAL ENGINEERING
2. INDIVIDUAL POLE HEIGHTS ABOVE GROUND MAY VARY SUBJECT TO FINAL LOCATION AND TERRAIN
3. STRUCTURE HEIGHTS ARE MEASURED FROM STRUCTURE CENTERLINE
4. MINIMUM FOUNDATION REVEAL SHALL BE 1.5', MAX REVEAL SUBJECT TO FINAL LOCATION AND TERRAIN
5. THE AVERAGE SPAN LENGTH LISTED IS BASED ON THE ENTIRE ROW LISTED IN LINE (B)

Electric Transmission

Dominion Energy
5000 Dominion Blvd
Glen Allen, VA 23060

SECTION 4 - SOLUTION 1B
DOUBLE CIRCUIT DEADEND STEEL
MONOPOLE STRUCTURES

ATTACHMENT NO.

DRAWN BY: CBW

PEGASUS TO HORNBAKER ROUTE 1

SECTION 5
SOLUTION 1B

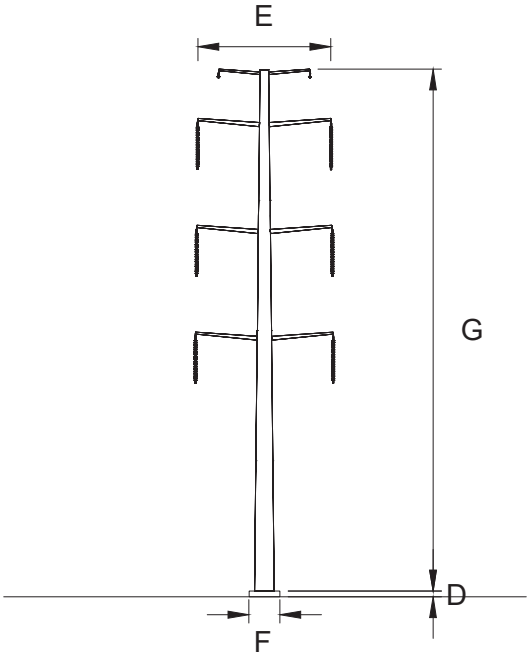

DOUBLE CIRCUIT SUSPENSION STEEL MONOPOLE STRUCTURE

A. RATIONALE FOR STRUCTURE TYPE:	STRUCTURES ARE TO ACCOMMODATE TWO CIRCUITS
B. LENGTH OF R/W (STRUCTURE QUANTITY):	1.90 MILES (6 STRUCTURES)
C. STRUCTURE MATERIAL:	GALVANIZED STEEL
RATIONALE FOR STRUCTURE MATERIAL:	GALVANIZED STEEL WAS SELECTED TO MATCH NEARBY EXISTING STRUCTURES.
D. FOUNDATION MATERIAL:	CONCRETE
AVERAGE FOUNDATION REVEAL:	SEE NOTE 4
E. AVERAGE WIDTH AT CROSSARM:	27.5'
F. AVERAGE WIDTH AT BASE:	5.5' - 6' DIAMETER FOUNDATION (SEE NOTE 1)
G. MINIMUM STRUCTURE HEIGHT:	100'
MAXIMUM STRUCTURE HEIGHT:	125'
AVERAGE STRUCTURE HEIGHT:	117'
H. AVERAGE SPAN LENGTH:	475'
I. MINIMUM CONDUCTOR-TO-GROUND:	25.5' (AT MAXIMUM OPERATING TEMPERATURE)

NOTES

1. INFORMATION ON DRAWING IS PRELIMINARY AND SUBJECT TO CHANGE DURING FINAL ENGINEERING
2. INDIVIDUAL POLE HEIGHTS ABOVE GROUND MAY VARY SUBJECT TO FINAL LOCATION AND TERRAIN
3. STRUCTURE HEIGHTS ARE MEASURED FROM STRUCTURE CENTERLINE
4. MINIMUM FOUNDATION REVEAL SHALL BE 1.5', MAX REVEAL SUBJECT TO FINAL LOCATION AND TERRAIN
5. THE AVERAGE SPAN LENGTH LISTED IS BASED ON THE ENTIRE ROW LISTED IN LINE (B)

Electric Transmission

Dominion Energy
5000 Dominion Blvd
Glen Allen, VA 23060

SECTION 5 - SOLUTION 1B
DOUBLE CIRCUIT SUSPENSION
STEEL MONOPOLE STRUCTURES

ATTACHMENT NO.

DRAWN BY: CBW

PEGASUS TO HORNBAKER SOLUTION 1

SECTION 6
SOLUTION 1B

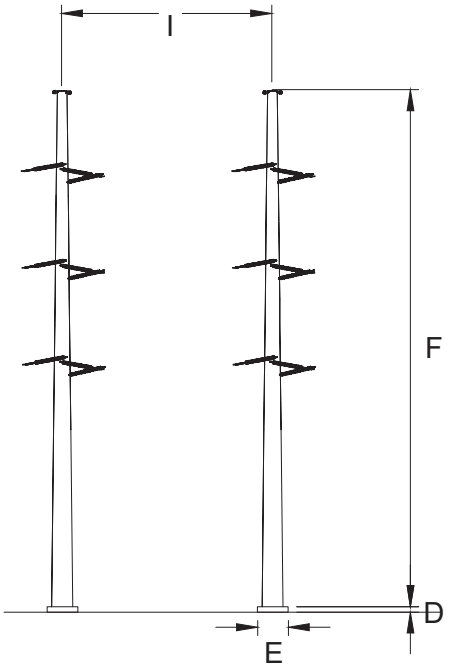

DOUBLE CIRCUIT DEADEND STEEL 2-POLE

A. RATIONALE FOR STRUCTURE TYPE:	STRUCTURES ARE TO ACCOMMODATE TWO CIRCUITS
B. LENGTH OF R/W (STRUCTURE QUANTITY):	1.90 MILES (1 STRUCTURE)
C. STRUCTURE MATERIAL:	GALVANIZED STEEL
RATIONALE FOR STRUCTURE MATERIAL:	GALVANIZED STEEL WAS SELECTED TO MATCH NEARBY EXISTING STRUCTURES.
D. FOUNDATION MATERIAL:	CONCRETE
AVERAGE FOUNDATION REVEAL:	SEE NOTE 4
E. AVERAGE WIDTH AT BASE:	8.5' DIAMETER FOUNDATION (SEE NOTE 1)
F. MINIMUM STRUCTURE HEIGHT:	115'
MAXIMUM STRUCTURE HEIGHT:	115'
AVERAGE STRUCTURE HEIGHT:	115'
G. AVERAGE SPAN LENGTH:	475'
H. MINIMUM CONDUCTOR-TO-GROUND:	25.5' (AT MAXIMUM OPERATING TEMPERATURE)
I. AVERAGE DISTANCE BETWEEN POLES:	34'

NOTES

1. INFORMATION ON DRAWING IS PRELIMINARY AND SUBJECT TO CHANGE DURING FINAL ENGINEERING
2. INDIVIDUAL POLE HEIGHTS ABOVE GROUND MAY VARY SUBJECT TO FINAL LOCATION AND TERRAIN
3. STRUCTURE HEIGHTS ARE MEASURED FROM STRUCTURE CENTERLINE
4. MINIMUM FOUNDATION REVEAL SHALL BE 1.5', MAX REVEAL SUBJECT TO FINAL LOCATION AND TERRAIN
5. THE AVERAGE SPAN LENGTH LISTED IS BASED ON THE ENTIRE ROW LISTED IN LINE (B)

Electric Transmission

Dominion Energy
5000 Dominion Blvd
Glen Allen, VA 23060

SECTION 6 - SOLUTION 1B
DOUBLE CIRCUIT DEADEND STEEL
2-POLE STRUCTURE

ATTACHMENT NO.

DRAWN BY: CBW

DEVLIN TO PEGASUS ROUTE 2

SECTION 7
SOLUTION 1B

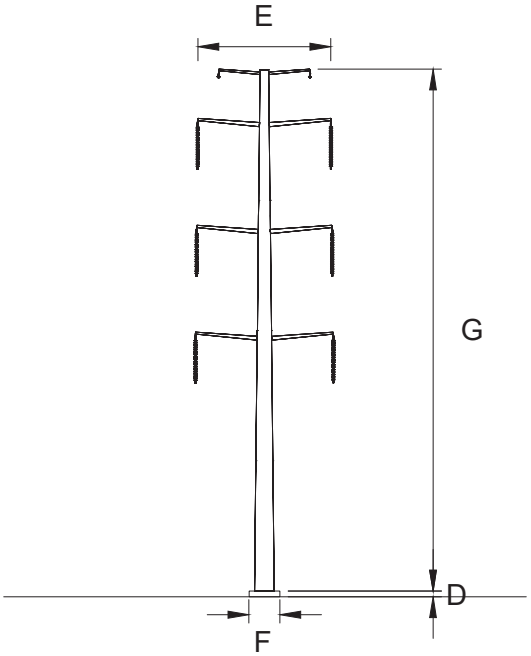

DOUBLE CIRCUIT DEADEND STEEL MONOPOLE STRUCTURE

A. RATIONALE FOR STRUCTURE TYPE:	STRUCTURES ARE TO ACCOMMODATE TWO CIRCUITS
B. LENGTH OF R/W (STRUCTURE QUANTITY):	2.84 MILES (22 STRUCTURES)
C. STRUCTURE MATERIAL:	GALVANIZED STEEL
RATIONALE FOR STRUCTURE MATERIAL:	GALVANIZED STEEL WAS SELECTED TO MATCH NEARBY EXISTING STRUCTURES.
D. FOUNDATION MATERIAL:	CONCRETE
AVERAGE FOUNDATION REVEAL:	SEE NOTE 4
E. AVERAGE WIDTH AT CROSSARM:	27.5'
F. AVERAGE WIDTH AT BASE:	7' - 9.5' DIAMETER FOUNDATION (SEE NOTE 1)
G. MINIMUM STRUCTURE HEIGHT:	90'
MAXIMUM STRUCTURE HEIGHT:	130'
AVERAGE STRUCTURE HEIGHT:	105'
H. AVERAGE SPAN LENGTH:	500'
I. MINIMUM CONDUCTOR-TO-GROUND:	25.5' (AT MAXIMUM OPERATING TEMPERATURE)

NOTES

1. INFORMATION ON DRAWING IS PRELIMINARY AND SUBJECT TO CHANGE DURING FINAL ENGINEERING
2. INDIVIDUAL POLE HEIGHTS ABOVE GROUND MAY VARY SUBJECT TO FINAL LOCATION AND TERRAIN
3. STRUCTURE HEIGHTS ARE MEASURED FROM STRUCTURE CENTERLINE
4. MINIMUM FOUNDATION REVEAL SHALL BE 1.5', MAX REVEAL SUBJECT TO FINAL LOCATION AND TERRAIN
5. THE AVERAGE SPAN LENGTH LISTED IS BASED ON THE ENTIRE ROW LISTED IN LINE (B)

Electric Transmission

Dominion Energy
5000 Dominion Blvd
Glen Allen, VA 23060

SECTION 7 - SOLUTION 1B
DOUBLE CIRCUIT DEADEND STEEL
MONOPOLE STRUCTURES

ATTACHMENT NO.

DRAWN BY: CBW

DEVLIN TO PEGASUS ROUTE 2

SECTION 8
SOLUTION 1B

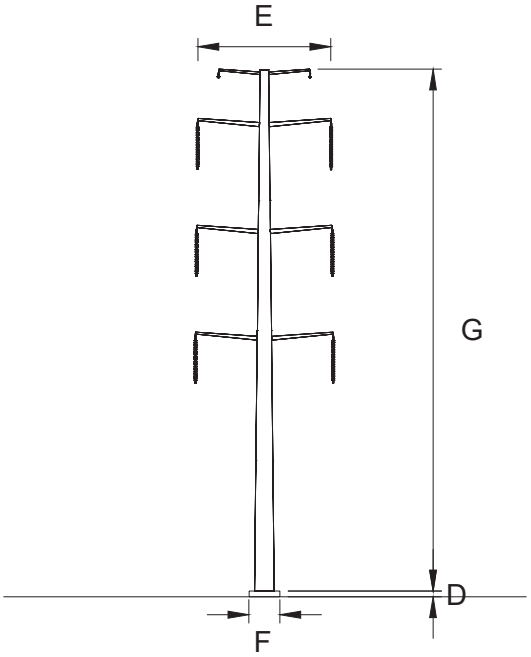

DOUBLE CIRCUIT SUSPENSION STEEL MONOPOLE STRUCTURE

A. RATIONALE FOR STRUCTURE TYPE:	STRUCTURES ARE TO ACCOMMODATE TWO CIRCUITS
B. LENGTH OF R/W (STRUCTURE QUANTITY):	2.84 MILES (4 STRUCTURES)
C. STRUCTURE MATERIAL:	GALVANIZED STEEL
RATIONALE FOR STRUCTURE MATERIAL:	GALVANIZED STEEL WAS SELECTED TO MATCH NEARBY EXISTING STRUCTURES.
D. FOUNDATION MATERIAL:	CONCRETE
AVERAGE FOUNDATION REVEAL:	SEE NOTE 4
E. AVERAGE WIDTH AT CROSSARM:	27.5'
F. AVERAGE WIDTH AT BASE:	5.5' - 6' DIAMETER FOUNDATION (SEE NOTE 1)
G. MINIMUM STRUCTURE HEIGHT:	110'
MAXIMUM STRUCTURE HEIGHT:	130'
AVERAGE STRUCTURE HEIGHT:	118'
H. AVERAGE SPAN LENGTH:	500'
I. MINIMUM CONDUCTOR-TO-GROUND:	25.5' (AT MAXIMUM OPERATING TEMPERATURE)

NOTES

1. INFORMATION ON DRAWING IS PRELIMINARY AND SUBJECT TO CHANGE DURING FINAL ENGINEERING
2. INDIVIDUAL POLE HEIGHTS ABOVE GROUND MAY VARY SUBJECT TO FINAL LOCATION AND TERRAIN
3. STRUCTURE HEIGHTS ARE MEASURED FROM STRUCTURE CENTERLINE
4. MINIMUM FOUNDATION REVEAL SHALL BE 1.5', MAX REVEAL SUBJECT TO FINAL LOCATION AND TERRAIN
5. THE AVERAGE SPAN LENGTH LISTED IS BASED ON THE ENTIRE ROW LISTED IN LINE (B)

Electric Transmission

Dominion Energy
5000 Dominion Blvd
Glen Allen, VA 23060

SECTION 8 - SOLUTION 1B
DOUBLE CIRCUIT SUSPENSION
STEEL MONOPOLE STRUCTURES

ATTACHMENT NO.

DRAWN BY: CBW

DEVLIN TO PEGASUS ROUTE 2

SECTION 9
SOLUTION 1B

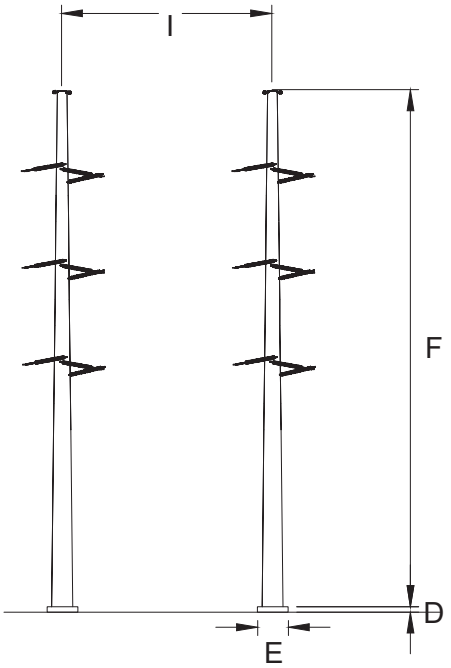

DOUBLE CIRCUIT DEADEND STEEL 2-POLE

A. RATIONALE FOR STRUCTURE TYPE:	STRUCTURES ARE TO ACCOMMODATE TWO CIRCUITS
B. LENGTH OF R/W (STRUCTURE QUANTITY):	2.84 MILES (4 STRUCTURES)
C. STRUCTURE MATERIAL:	GALVANIZED STEEL
RATIONALE FOR STRUCTURE MATERIAL:	GALVANIZED STEEL WAS SELECTED TO MATCH NEARBY EXISTING STRUCTURES.
D. FOUNDATION MATERIAL:	CONCRETE
AVERAGE FOUNDATION REVEAL:	SEE NOTE 4
E. AVERAGE WIDTH AT BASE:	7.5' - 9.5' DIAMETER FOUNDATION (SEE NOTE 1)
F. MINIMUM STRUCTURE HEIGHT:	95'
MAXIMUM STRUCTURE HEIGHT:	120'
AVERAGE STRUCTURE HEIGHT:	108'
G. AVERAGE SPAN LENGTH:	500'
H. MINIMUM CONDUCTOR-TO-GROUND:	25.5' (AT MAXIMUM OPERATING TEMPERATURE)
I. AVERAGE DISTANCE BETWEEN POLES:	34'

NOTES

1. INFORMATION ON DRAWING IS PRELIMINARY AND SUBJECT TO CHANGE DURING FINAL ENGINEERING
2. INDIVIDUAL POLE HEIGHTS ABOVE GROUND MAY VARY SUBJECT TO FINAL LOCATION AND TERRAIN
3. STRUCTURE HEIGHTS ARE MEASURED FROM STRUCTURE CENTERLINE
4. MINIMUM FOUNDATION REVEAL SHALL BE 1.5', MAX REVEAL SUBJECT TO FINAL LOCATION AND TERRAIN
5. THE AVERAGE SPAN LENGTH LISTED IS BASED ON THE ENTIRE ROW LISTED IN LINE (B)

Electric Transmission

Dominion Energy
5000 Dominion Blvd
Glen Allen, VA 23060

SECTION 9 - SOLUTION 1B
DOUBLE CIRCUIT DEADEND STEEL
2-POLE STRUCTURE

ATTACHMENT NO.

DRAWN BY: CBW

SECTION 1 - SOLUTION 1B

LOOKING TOWARDS HORNBAKER SUB

	230kV CIRCUIT	230kV CIRCUIT
WELLINGTON - PEGASUS ROUTE 1	LINE #2325	LINE #2423
PEGASUS - HORNBAKER ROUTE 1	LINE #2424	LINE #2187
DEVLIN - PEGASUS ROUTE 2 (NOTE 3)	LINE #2419	LINE #2420

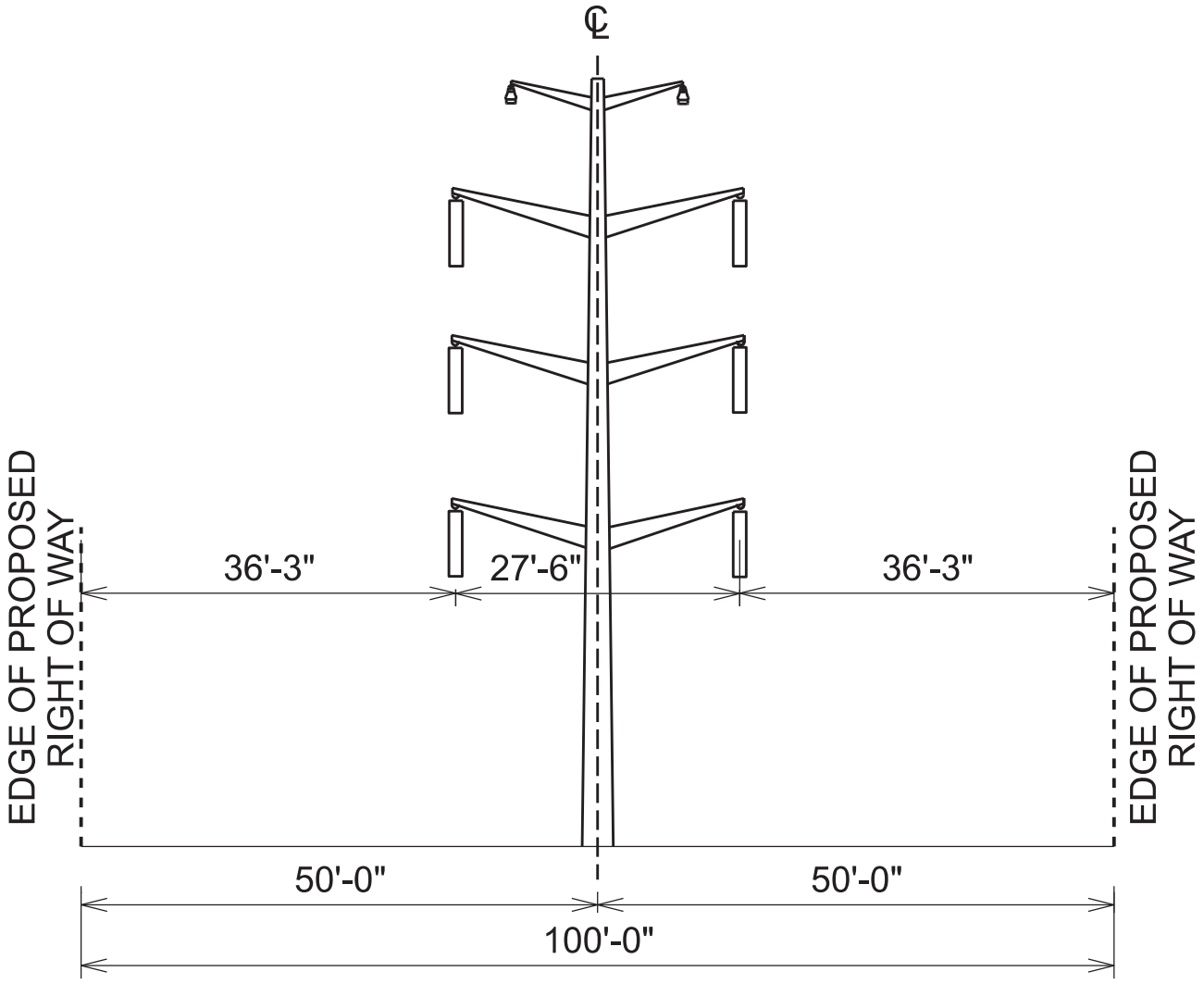

NOTES:

1. INFORMATION CONTAINED ON DRAWINGS IS CONSIDERED PRELIMINARY IN NATURE AND SUBJECT TO CHANGE BASED ON FINAL DESIGN.
2. DRAWING NOT TO SCALE.
3. SEE ATTACHMENT II.A.5.b FOR REDUCED ROW FROM STR. 2419/18 TO STR. 2419/19.

Transmission Construction	PROPOSED ROW CONFIGURATION (230KV/230KV) MONOPOLE AREAS - 100-FT WIDE ROW					
Dominion Energy Dominion Energy 5000 Dominion Blvd Glen Allen, VA 23060		DRAWN	CHECKED	APPROVED	DATE	ATTACHMENT NO.
	STANDARD	CBW	TCG		12/30/24	II.A.5.a
	REVISION					CAD NO.

$SYTIME$ $DGNSPEC$ TESBORD1

SECTION 2 - SOLUTION 1B

LOOKING TOWARDS HORNBAKER SUB

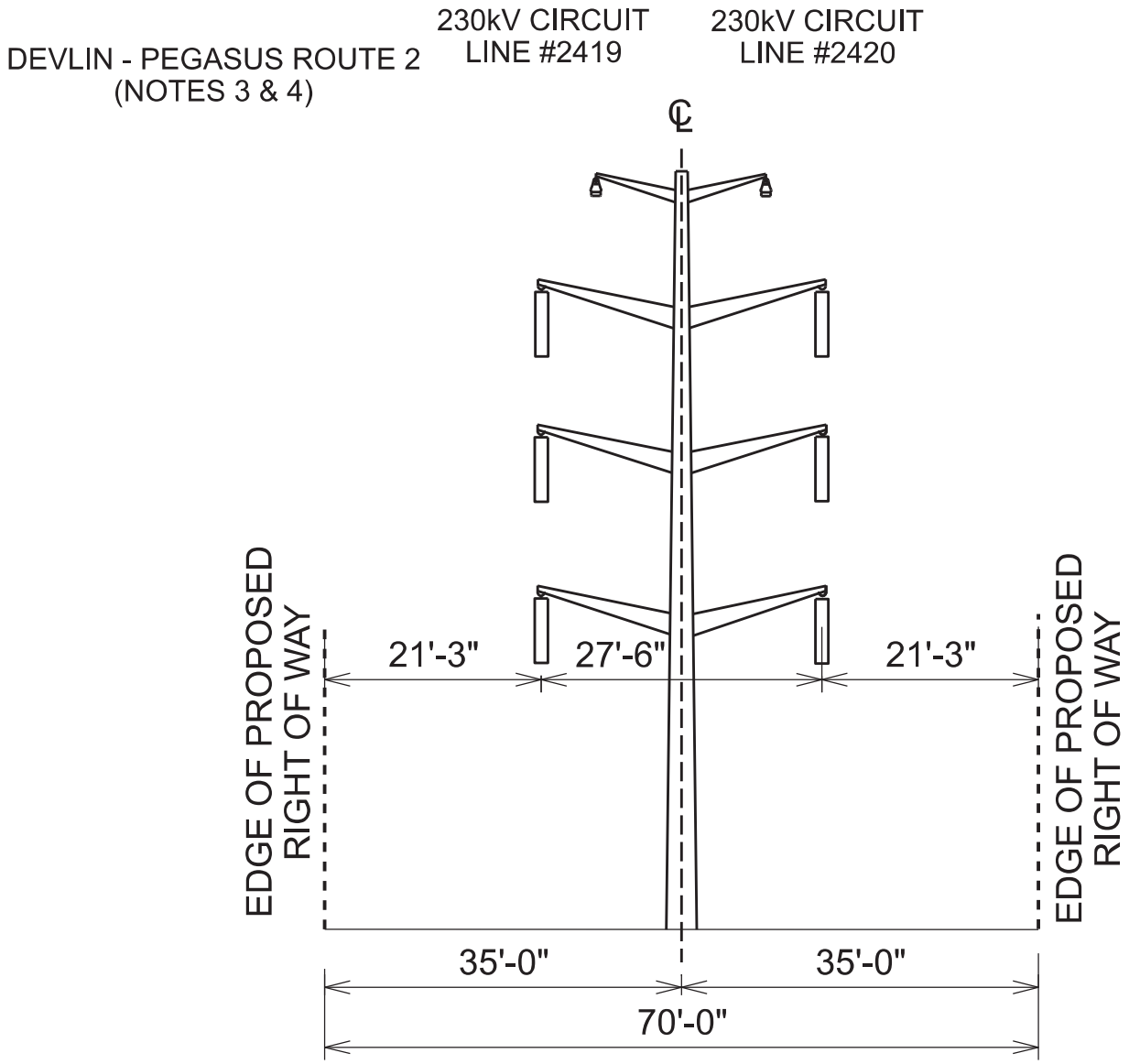

NOTES:

1. INFORMATION CONTAINED ON DRAWINGS IS CONSIDERED PRELIMINARY IN NATURE AND SUBJECT TO CHANGE BASED ON FINAL DESIGN.
2. DRAWING NOT TO SCALE.
3. CROSS-SECTION ONLY APPLIES TO THE SECTION OF ROW BETWEEN STR. 2419/18 AND STR. 2419/19.
4. FOR ALL ADDITIONAL ROW EXTENTS SEE ATTACHMENT II.A.5.a.

Transmission Construction	PROPOSED ROW CONFIGURATION (230KV/230KV) MONOPOLE AREAS - 70-FT WIDE ROW					
Dominion Energy Dominion Energy 5000 Dominion Blvd Glen Allen, VA 23060		DRAWN	CHECKED	APPROVED	DATE	ATTACHMENT NO.
	STANDARD	CBW	TCG		12/30/24	II.A.5.b
	REVISION					CAD NO.

APPENDIX C FEATURES CROSSING TABLE

APPENDIX C - TABLE 1: HORNBAKER 230 KV LOOP PROJECT - FEATURE CROSSINGS TABLE BY ROUTE

Environmental Feature [a, b]	Unit	Wellington-Pegasus Route 1	Pegasus-Hornbaker Route 1 [c]	Hourglass-Hornbaker Route 1 (Hybrid)[d]	Devlin-Pegasus	
					Route 1	Route 2
ROUTE LENGTH AND CONSTRUCTION FOOTPRINT						
Centerline Length	miles	0.6	1.9	0.5 underground 0.8 overhead	2.4	2.8
Construction Footprint	acres	7.2	24.8	17.1	28.6	33.4
ROUTING OPPORTUNITIES						
Collocation (total)	miles	0.3	1.2	0.6	0.4	1.0
Existing Roads	miles	0.3	0.4	0.0	0.1	0.7
Existing Utilities	miles	0.0	0.7	0.4	0.4	0.3
Existing Utilities and Roads	miles	0.0	0.2	0.2	0.0	0.1
LAND USE						
Land Ownership						
Parcels Crossed by ROW (total)	number	8	34	15	33	33
Private	number	6	32	11	28	28
Public	number	2 [e]	2 [e]	4	5 [e]	5 [e]
Land Use/Land Cover [f]						
Forested	acres	2.2	5.6	1.9	11.5	14.0
Agricultural	acres	0.0	0.0	0.0	0.0	0.0
Developed	acres	3.2	12.5	13.2	5.4	7.2

Environmental Feature [a, b]	Unit	Wellington-Pegasus Route 1	Pegasus-Hornbaker Route 1 [c]	Hourglass-Hornbaker Route 1 (Hybrid)[d]	Devlin-Pegasus	
					Route 1	Route 2
Open space	acres	1.8	6.6	2.0	11.3	12.2
Open water	acres	0.0	0.0	0.0	0.4	0.0
Recreational Resources						
Broad Run Linear Park	acres	0	0	0	0	0
Trail Crossings (total)	number	3	3	2	3	5
Trails - Existing	number	0	1	0	2	2
Trails - Proposed	number	3	2	2	1	3
Residences and Other Structures						
Dwellings within ROW	number	0	0	0	0	0
Dwellings within 60 feet of ROW	number	0	0	0	4	0
Dwellings within 100 feet of Centerline	number	0	0	0	3	0
Dwellings within 250 feet of Centerline	number	0	2	0	24	6
Dwellings within 500 feet of Centerline	number	0	6	0	92	34
Non-residential Buildings within ROW	number	0	0	0	0	0
Non-residential Buildings within 500 feet of Centerline	number	17	58	20	57	58
Cemeteries, Schools, and Places of Worship						
Cemeteries within 500 feet of Centerline	number	0	0	0	0	0
Schools within 500 feet of Centerline	number	0	0	0	0	0

Environmental Feature [a, b]	Unit	Wellington-Pegasus Route 1	Pegasus-Hornbaker Route 1 [c]	Hourglass-Hornbaker Route 1 (Hybrid)[d]	Devlin-Pegasus	
					Route 1	Route 2
Places of Worship within 500 feet of Centerline	number	0	0	0	0	0
Planned Developments						
Planned developments (total)	number acres	4 4.1	4 19.1	2 13.4	10 17.7	11 22.7
Amazon Data Center Campus	acres	0.0	0.0	0.0	0.5	0.4
Avanti Data Center Campus	acres	0.0	6.2	1.1	0.0	0.0
Black Chamber Group	acres	0.0	0.0	0.0	2.7	2.7
Cambria Lexington Valley	acres	0.0	0.0	0.0	0.5	0.0
Firestone Park Center	acres	0.0	0.0	0.0	0.2	0.2
Hayden Road Public Improvement Plan	acres	0.0	0.0	0.0	0.0	0.5
Hornbaker Testfit	acres	2.7	0.0	0.0	0.0	0.0
Hourglass Substation and Innovation Covance Data Center	acres	0.0	0.0	9.8	0.0	0.0
Independence Parcel A1A & A1B	acres	0.0	0.0	0.0	1.8	3.7
Innovation Town Center	acres	< 0.1	0.0	0.0	0.0	0.0
Iron Mountain Data Center Campus	acres	0.0	0.0	0.0	0.0	4.9
JK Holdings Redstone Data Center Campus	acres	0.0	6.2	0.0	0.0	0.0
Microsoft Bristow	acres	0.0	0.0	0.0	1.1	1.1
Millwood Market Fuel Station	acres	1.1	0.0	0.0	0.0	0.0

Environmental Feature [a, b]	Unit	Wellington-Pegasus Route 1	Pegasus-Hornbaker Route 1 [c]	Hourglass-Hornbaker Route 1 (Hybrid)[d]	Devlin-Pegasus	
					Route 1	Route 2
SouthPoint Phase II	acres	0.0	0.0	0.0	1.6	1.6
Truck Enterprises, Inc.	acres	0.0	0.4	0.0	0.0	0.0
Wellington Glen and Pegasus Substation	acres	0.3	2.4	0.0	3.1	3.1
Wellington Glen Technology Park	acres	0.0	0.0	0.0	5.7	4.1
Transportation and Utilities						
Roads	number	4	7	4	7	10
Railroads	number	0	0	0	0	0
Pipelines	number	0	0	0	5	5
NATURAL RESOURCES						
Wetlands [g]						
Wetlands Affected (total)	acres miles	<0.1 <0.1	1.1 0.1	0.7 <0.1	6.3 0.5	5.3 0.4
Palustrine Forested	acres	NA	0.4	0.6	4.7	4.1
Palustrine Scrub-Shrub	acres	NA	NA	NA	NA	NA
Palustrine Emergent	acres	<0.1	0.1	NA	0.5	0.5
Palustrine Unconsolidated Bottom	acres	NA	0.5	0.1	0.7	0.3
Riverine	acres	NA	0.2	<0.1	0.5	0.5
Waterbodies						

Environmental Feature [a, b]	Unit	Wellington-Pegasus Route 1	Pegasus-Hornbaker Route 1 [c]	Hourglass-Hornbaker Route 1 (Hybrid)[d]	Devlin-Pegasus	
					Route 1	Route 2
Waterbody (total)	number	0	4	2	16	17
Perennial Streams	number	0	0	0	3	3
Intermittent Streams	number	0	2	1	8	9
Perennial Lake/Pond	number	0	1	1	3	3
Non-NHD Mapped Waterbodies	number	0	1	0	2	2
Natural Heritage Resources						
SCSs or Conservation Sites						
Broad Run - Cannon Branch SCS	acres	0.0	6.0	1.2	0.0	0.0
Ecological Cores						
C1: Outstanding	acres	0.0	0.0	0.0	0.0	0.0
C2: Very High	acres	0.0	0.0	0.0	0.0	0.0
C3: High	acres	0.0	0.0	0.0	0.0	0.0
C4: Moderate	acres	0.0	0.0	0.0	0.0	0.0
C5: General	acres	0.0	0.0	0.0	1.0	1.0
Protected Species						
Bald Eagle Nests within 330 feet	number	0	0	0	0	0
Bald Eagle Nests within 660 feet	number	0	0	0	0	0
Resource Protection Areas (RPAs)						

Environmental Feature [a, b]	Unit	Wellington-Pegasus Route 1	Pegasus-Hornbaker Route 1 [c]	Hourglass-Hornbaker Route 1 (Hybrid)[d]	Devlin-Pegasus	
					Route 1	Route 2
PWC RPAs	acres	0.0	0.8	0.0	3.8	4.8
Significant Geological Resources						
Diabase Soils	acres	4.4	11.6	0.0	7.8	8.0
Forest Conservation Value						
Average (1)	acres	2.6	7.9	0.0	11.9	11.0
Moderate (2)	acres	0.0	0.0	0.0	0.0	0.0
High (3)	acres	0.0	0.0	0.0	0.0	0.0
Very High (4)	acres	0.0	0.0	0.0	0.0	0.0
Outstanding (5)	acres	0.0	0.0	0.0	0.0	0.0
CULTURAL RESOURCES						
Archaeological Sites within ROW	number	0	1	1	0	3
NRHP-eligible and NRHP-listed properties, NHLs, battlefields, and historic landscapes within right-of-way	number	1	0	0	1	1
NRHP-eligible and NRHP-listed properties, NHLs, battlefields, and historic landscapes within 0.5 mile	number	0	1	2	0	0
NRHP-listed properties, NHLs, battlefields, historic landscapes, and NHLs between 0.5 and 1.0 mile	number	0	1	3	0	0
NHLs between 1.0 and 1.5 Miles	number	0	0	0	0	0
Historic Districts Crossed	number	0	0	0	0	0

Environmental Feature [a, b]	Unit	Wellington-Pegasus Route 1	Pegasus-Hornbaker Route 1 [c]	Hourglass-Hornbaker Route 1 (Hybrid)[d]	Devlin-Pegasus	
					Route 1	Route 2
NRHP Listed Battlefields Crossed	number	0	0	0	0	0
NRHP Eligible Battlefields Crossed	number	0	0	0	0	0
VDHR Easements Crossed	number	0	0	0	0	0
Battlefields (National Park Service ABPP) Crossed	number	1	0	0	1	1

ROW = right-of-way; SCS = Stream Conservation Site; ABPP = American Battlefield Protection Program; NHL = National Historic Landmark; NRHP = National Register of Historic Places; VDHR = Virginia Department of Historic Resources; VOF = Virginia Outdoors Foundation

a The sum of the addends may not equal the totals due to rounding.
b The crossing lengths presented in this table for all feature categories are based on hypothetical centerlines within the right-of-way for each route alternative.
c Component 2 is inclusive of the 2.3-acre Hornbaker Switching Station and the 22.5-acre Pegasus-Hornbaker Route 1 footprints.
d Component 3 is inclusive of the 3.1-acre transition station, 0.7-acre workspace, 6.2-acre overhead lines, and 7.2-acre underground lines footprints.
e Crossings only include parcels associated with existing/future roads.
f Based on Virginia Land Cover Dataset.
g Wetland acreages are based on results of the wetland and waterbody desktop study (see Appendix D). NA indicates not applicable due to absence of a wetland type within the Project footprint; 0.0 indicates less than 0.05 acre of the wetland is present.

APPENDIX C - TABLE 2: HORNBAKER 230 KV LOOP PROJECT - FEATURE CROSSINGS TABLE BY SOLUTION

Environmental Feature [a]	Unit	Solution 1A	Solution 1B	Solution 2A	Solution 2B
ROUTE LENGTH AND CONSTRUCTION FOOTPRINT					
Centerline Length	miles	4.9	5.3	0.8 underground 4.8 overhead	0.8 underground 5.2 overhead
Construction Footprint	acres	60.5	65.4	70.2	75.1
ROUTING OPPORTUNITIES					
Collocation (total)	miles	2.0	2.5	2.1	2.8
Existing Roads	miles	0.8	1.3	0.4	1.0
Existing Utilities	miles	1.1	1.0	1.4	1.4
Existing Utilities and Roads	miles	0.2	0.2	0.3	0.4
LAND USE					
Land Ownership					
Parcels Crossed by ROW (total)	number	71	71	78	78
Private	number	64	64	68	68
Public	number	7	7	10	10
Land Use / Land Cover [f]					
Forested	acres	19.4	21.9	19.1	21.6
Agricultural	acres	0.0	0.0	0.0	0.0
Developed	acres	21.1	22.9	30.9	32.7
Open space	acres	19.7	20.6	19.9	20.8

Environmental Feature [a]	Unit	Solution 1A	Solution 1B	Solution 2A	Solution 2B
Open water	acres	0.4	0.0	0.4	0.0
Recreational Resources					
Broad Run Linear Park	acres	0.0	0.0	0.0	0.0
Trail Crossings (total)	number	9	11	8	10
Trails - Existing	number	3	3	3	3
Trails - Proposed	number	6	8	5	7
Residences and Other Structures					
Dwellings within ROW	number	0	0	0	0
Dwellings within 60 feet of ROW	number	4	0	4	0
Dwellings within 100 feet of Centerline	number	3	0	3	0
Dwellings within 250 feet of Centerline	number	26	8	26	8
Dwellings within 500 feet of Centerline	number	98	40	98	40
Non-residential Buildings within ROW	number	0	0	0	0
Non-residential Buildings within 500 feet of Centerline	number	129	130	131	132
Cemeteries, Schools, and Places of Worship					
Cemeteries within 500 feet of Centerline	number	0	0	0	0
Schools within 500 feet of Centerline	number	0	0	0	0
Places of Worship within 500 feet of Centerline	number	0	0	0	0

Environmental Feature [a]	Unit	Solution 1A	Solution 1B	Solution 2A	Solution 2B
Planned Developments					
Planned developments (total)	number acres	15 42.5	16 47.5	13 51.6	14 56.6
Amazon Data Center Campus	acres	0.5	0.4	0.5	0.4
Avanti Data Center Campus	acres	6.7	6.7	7.5	7.5
Black Chamber Group	acres	2.7	2.7	2.7	2.7
Cambria Lexington Valley	acre	0.5	0.0	0.5	0.0
Firestone Park Center	acres	0.2	0.2	0.2	0.2
Hayden Road PIP	acres	0.0	0.5	0.0	0.5
Hornbaker Testfit	acres	2.7	2.7	0.0	0.0
Hourglass Sub and Innovation Covance Data Center	acres	0.0	0.0	9.8	9.8
Independence Parcel A1A & A1B	acres	1.8	3.7	1.8	3.7
Innovation Town Center	acres	<0.1	<0.1	0.0	0.0
Iron Mountain Data Center Campus	acres	0.0	4.9	0.0	4.9
JK Holdings Redstone Data Center Campus	acres	6.2	6.2	6.2	6.2
Microsoft Bristow	acres	1.1	1.1	1.1	1.1
Millwood Market Fuel Station	acres	1.1	1.1	0.0	0.0
SouthPoint Phase II	acres	1.6	1.6	1.6	1.6
Truck Enterprises, Inc.	acres	0.4	0.4	0.4	0.4

Environmental Feature [a]	Unit	Solution 1A	Solution 1B	Solution 2A	Solution 2B
Wellington Glen and Pegasus Substation	acres	5.7	5.7	5.5	5.5
Wellington Glen Technology Park	acres	5.7	4.1	5.7	4.1
Transportation and Utilities					
Roads	number	18	21	18	21
Railroads	number	0	0	0	0
Pipelines	number	5	5	5	5
NATURAL RESOURCES					
Wetlands [g]					
Wetlands Affected (total)[d]	acres miles	7.4 0.5	6.4 0.4	8.0 0.5	7.1 0.4
Palustrine Forested	acres	5.0	4.4	5.7	5.0
Palustrine Scrub-Shrub	acres	NA	NA	NA	NA
Palustrine Emergent	acres	0.6	0.6	0.6	0.6
Palustrine Unconsolidated Bottom	acres	1.1	0.8	1.1	0.8
Riverine	acres	0.6	0.7	0.6	0.7
Waterbodies					
Waterbody (total)[e]	number	20	21	22	23
Perennial Streams	number	3	3	3	3
Intermittent Streams	number	10	11	11	12
Perennial Lake/Pond	number	4	4	5	5

Environmental Feature [a]	Unit	Solution 1A	Solution 1B	Solution 2A	Solution 2B
Non-NHD Mapped Waterbodies	number	3	3	3	3
Natural Heritage Resources					
SCSs or Conservation Sites					
Broad Run - Cannon Branch SCS	acres	6.0	6.0	7.0	7.0
Ecological Cores					
C1: Outstanding	acres	0.0	0.0	0.0	0.0
C2: Very High	acres	0.0	0.0	0.0	0.0
C3: High	acres	0.0	0.0	0.0	0.0
C4: Moderate	acres	0.0	0.0	0.0	0.0
C5: General	acres	1.0	1.0	1.0	1.0
Protected Species					
Bald Eagle Nests within 330 feet	number	0	0	0	0
Bald Eagle Nests within 660 feet	number	0	0	0	0
Resource Protection Areas (RPAs)					
PWC RPAs	acres	4.6	5.6	4.6	5.6
Significant Geological Resources					
Diabase Soils	acres	23.8	24.0	19.4	19.6
Forest Conservation Value					
Average (1)	acres	22.4	21.5	19.8	18.9

Environmental Feature [a]	Unit	Solution 1A	Solution 1B	Solution 2A	Solution 2B
Moderate (2)	acres	0.0	0.0	0.0	0.0
High (3)	acres	0.0	0.0	0.0	0.0
Very High (4)	acres	0.0	0.0	0.0	0.0
Outstanding (5)	acres	0.0	0.0	0.0	0.0
CULTURAL RESOURCES					
Archaeological Sites within ROW	number	1	4	2	5
NRHP Eligible and NRHP Listed Properties, NHLs, Battlefields, and Historic Landscapes within ROW	number	1	1	1	1
NRHP Eligible and NRHP Listed Properties, NHLs, Battlefields, and Historic Landscapes within 0.5 Mile	number	0	0	2	2
NRHP-listed properties, NHLs, battlefields, historic landscapes, and NHLs between 0.5 and 1.0 mile	number	1	1	2	2
NHLs between 1.0 and 1.5 Miles	number	0	0	0	0
Historic Districts Crossed	number	0	0	0	0
NRHP Listed Battlefields Crossed	number	0	0	0	0
NRHP Eligible Battlefields Crossed	number	0	0	0	0
VDHR Easements Crossed	number	0	0	0	0
Battlefields (National Park Service ABPP) Crossed	number	1	1	1	1

ROW = right-of-way; SCS = Stream Conservation Site; ABPP = American Battlefield Protection Program; NHL = National Historic Landmark; NRHP = National Register of Historic Places; VDHR = Virginia Department of Historic Resources; VOF = Virginia Outdoors Foundation

a The sum of the addends may not equal the totals due to rounding.

b Component 2 is inclusive of the 2.3-acre Hornbaker Switching Station and the 22.5-acre Pegasus-Hornbaker Route 1 footprints.

c Component 3 is inclusive of the 3.1-acre transition station, 0.7-acre workspace, 6.3-acre overhead lines, and 7.0-acre underground lines footprints.

c The crossing lengths presented in this table for all feature categories are based on hypothetical centerlines within the right-of-way for each route alternative.

d This is based on the USGS National Hydrography Dataset (USGS 2022).

e Crossings only include parcels associated with existing/future roads.

f Based on Virginia Land Cover Dataset.

g Wetland acreages are based on results of the wetland and waterbody desktop study (see Appendix D). NA indicates not applicable due to absence of a wetland type within the Project footprint; 0.0 indicates less than 0.05 acre of the wetland is present.

APPENDIX D WETLAND AND WATERBODY DESKTOP SUMMARY

222 South 9th Street
Suite 2900
Minneapolis, Minnesota 55402

T +0 804 253 1090
F +0 804 253 1091

erm.com

Virginia Department of Environmental Quality
Office of Environmental Impact Review
Ms. Bettina Rayfield, Manager
P.O. Box 1105
Richmond, Virginia 23218

DATE
14 March 2025

SUBJECT
Hornbaker 230 KV Line Loop and
Hornbaker Switching Station Project

REFERENCE
0577538

Dear Ms. Rayfield:

Environmental Resources Management (ERM), on behalf of Virginia Electric and Power Company (Dominion Energy Virginia, Dominion, or the Company), conducted a desktop wetland and waterbody review of publicly available information for the proposed Hornbaker 230 kilovolt (kV) Line Loop and Hornbaker Switching Station (Project) in Prince William County, Virginia. These transmission lines and the proposed Hornbaker Switching Station are collectively referred to as the Project. This delineation was done using desktop resources and methodology. A field delineation is required to verify the accuracy and extent of aquatic resource boundaries.

The purpose and need for the Project is to provide 300 MW of electrical service requested by the Northern Virginia Electric Cooperative (NOVEC) for a data center customer in Prince William County (the Customer), maintain reliable service for the overall load growth in the Hornbaker Load Area, and comply with mandatory North American Electric Reliability Corporation (NERC) Reliability Standards. Specifically, the Devlin Switching Station (a separate project) requires an additional 230 kV source to resolve the potential NERC reliability violation. To meet the Project purpose and need, Dominion proposes to construct and operate the following:

- A new 230-34.5 kV Switching Station in Prince William County on property to be obtained by the Company (Hornbaker Switching Station).
- One of two transmission solutions involving new, double circuit 230 kV transmission lines in new rights-of way. Dominion would construct either:
    - A series of overhead routes, including a segment from a cut in on Dominion's existing Lines #172/#2187 north of the existing Wellington Substation to the proposed Pegasus Switching Station; a segment from the Pegasus Switching Station to the proposed Hornbaker Switching Station; and a segment from the Pegasus Switching Station to the proposed Devlin Switching Station; OR

- A hybrid route that includes an overhead right-of-way from a cut in on Dominion's existing Line #2196, adjacent to the existing Hourglass Substation, to a transition station east of Prince William Parkway (where the route transitions to an underground route) then underground to the proposed Hornbaker Switching Station; as well as an overhead right-of-way from the proposed Hornbaker Switching Station to the Pegasus and Devlin Switching Stations (part of other projects).

ERM identified five route alternatives that can be combined to serve the two electrical solutions described above. A breakdown of the route alternatives that make up the two electrical solutions, each a grouping of three route alternatives, are included below in Table 1 and shown in Attachment 1.

TABLE 1 ROUTE ALTERNATIVES AND SOLUTIONS

Electrical Solution	Route Alternatives	Summary
Solution 1 (Overhead)	Wellington–Pegasus Route 1	Overhead double circuit route from a cut-in on existing Lines #172/#2187, north of the existing Wellington Substation, to the proposed Pegasus Switching Station. [a]
	Pegasus–Hornbaker Route 1	Overhead double circuit route between the proposed Hornbaker Switching Station and the proposed Pegasus Switching Station. [a]
	Devlin–Pegasus Route 1 OR Devlin–Pegasus Route 2	Overhead double circuit route between the proposed Pegasus Switching Station and the proposed Devlin Switching Station. [a]
Solution 2 (Hybrid)	Hourglass–Hornbaker Route 1 (Hybrid)	Hybrid underground and overhead double circuit route between a cut in on Dominion's existing Line #2196, adjacent to the existing Hourglass Substation, and the proposed Hornbaker Switching Station.
	Pegasus–Hornbaker Route 1	Overhead double circuit route between the proposed Hornbaker Switching Station and the proposed Pegasus Switching Station. [a]
	Devlin–Pegasus Route 1 OR Devlin–Pegasus Route 2	Overhead double circuit route between the proposed Pegasus Switching Station and the proposed Devlin Switching Station. [a]

[a] The Devlin and Pegasus Switching Stations have been proposed as part of other projects.

Detailed descriptions of each individual route and the proposed Hornbaker Switching Station are provided in the sections below.

The purpose of this desktop analysis is to identify and evaluate potential impacts of the Project on aquatic resources (wetlands, streams, creeks, runs, and open water features) in the area.

In accordance with Virginia Department of Environmental Quality (DEQ) and the State Corporation Commission's (SCC) Memorandum of Agreement, the evaluation was conducted using various data sets that may indicate wetland location and type. This report is being submitted to the DEQ as part of the DEQ Wetland Impacts Consultation.

This assessment did not include field investigations required for wetland delineations, as defined in the U.S. Army Corps of Engineers Wetland Delineation Manual (Environmental Laboratory, 1987) and the 2012 Regional Supplement to the Corps of Engineers Wetland Delineation Manual: Eastern Mountains and Piedmont Region (Version 2.0).

PROJECT STUDY AREA AND POTENTIAL ROUTES

A study area was developed encompassing an area containing the Project origin and termination points for the planned facilities (i.e., the proposed Project) as well as an area broad enough for the identification of reasonable route alternatives meeting the Project objectives. Additionally, and to the extent practicable, the limits of the study area were defined by reference to easily distinguishable landmarks, such as roads or other recognizable features.

Based on the above, ERM and Dominion defined the boundaries of the study area for the Project as follows:

- Dominion's existing 500 kV/230 kV transmission line corridor (Encompassing Lines #535, #2114, #569, and #2163) to the northwest;
- Prince Willliam Parkway and Dominion's existing transmission lines #2187/#172 to the northeast/east;
- The Norfolk Southern Railroad, and areas to its south, to the south; and
- Linton Hall Road to the west.

The study area encompasses approximately 11.9 square miles entirely within Prince William County. The southeast corner of the study area includes portions of the City of Manassas. The largest forested/undeveloped areas are associated with riparian areas along Dawkins Branch, Cannon Branch, and Broad Run waterways. The predominant land use/land cover in the study area is developed land. Developed land, such as industrial warehousing, data centers, and commercial buildings, are located in the northern and eastern portions of the study area along Prince William Parkway, Wellington Road, and University Boulevard. In the western part of the study area, developed lands include educational uses and medium-density residential areas. Forested land is dispersed throughout the developed areas. There are no agricultural lands within the study area. The study area is shown in Attachment 1.

ROUTE ALTERNATIVES

WELLINGTON-PEGASUS ROUTE

The Wellington–Pegasus Route 1 is an overhead route that taps Dominion existing Line #2187 approximately 0.2 mile north of the existing Wellington Substation. From the tap, the route extends southwest for approximately 0.2 mile, crossing an industrial yard, Thong Pan Road, and Wellington Road, as well as a forested parcel bounded by these roads. The route then turns west, paralleling the south side of Wellington Road for approximately 0.2 mile (including a crossing of Prince William Parkway). The route turns south paralleling the west side of Hornbaker Road for approximately 0.1 mile before crossing the road and terminating at the proposed Pegasus Switching Station.

Wellington-Pegasus Route 1 is approximately 0.6 mile long and requires approximately 7.2 acres of right-of-way. Existing land use along the route largely consists of a mix of forested and industrial lands and a small amount of residential development.

PEGASUS-HORNBAKER ROUTE 1

Pegasus–Hornbaker Route 1 is an overhead route that begins at the proposed Pegasus Switching Station, extending southeast for approximately 0.1 mile and then turning southwest for approximately 0.7 mile. This segment crosses through forested land adjacent to industrial and commercial development and crosses University Boulevard. East of Industrial Court, the route turns generally southeast and collocates with the east side of the road for about 0.2 mile, crossing an industrial storage yard/parking lot. The route then turns south for about 0.1 mile, crossing Industrial Court and Industrial Road and another industrial storage yard, before turning southeast and paralleling the west side of Hawkins Drive for about 0.2 mile. At this point, the route turns east, crosses the most southern part of Hawkins Drive and an industrial storage yard for 0.1 mile. The route then turns north and then back east for 0.2 mile, following parcel lines. The Route then turns to the south-southeast for about 0.3 mile (collocated with the west side of Hornbaker Road) before terminating at the proposed Hornbaker Switching Station.

Pegasus-Hornbaker Route 1 is approximately 1.9 miles long and requires approximately 24.8 acres, including approximately 22.5 acres for transmission right-of-way and 2.3 acres for the proposed Hornbaker Switching Station. The Hornbaker Switching Station acreage is included in Pegasus-Hornbaker Route 1 throughout this document. Existing land use along the route is primarily industrial development with some forested land.

HOURGLASS-HORNBAKER ROUTE 1 (HYBRID)

The Hourglass–Hornbaker Route 1 (Hybrid) is a combination of approximately 0.5 mile of overhead transmission with approximately 0.8 mile of underground transmission and includes an approximately 3.1-acre transition station. Hourglass-Hornbaker Route 1 (Hybrid) begins

as an overhead line that taps the Company's existing Line #2196 just outside the Hourglass Switching Station. The route then extends approximately 0.4-mile northwest adjacent to an existing data center development. The route turns southwest for approximately 0.2 mile and enters the proposed transition station (currently an existing parking lot and adjacent forested area), where it transitions from overhead to an underground route. The route then continues out of the station to the southwest, including a trenchless crossing of Prince William Parkway. On the west side of the Parkway, the route turns west for approximately 0.2 mile through county-owned property, parallel to and south of Challenger Court and across Discovery Boulevard. West of Discovery Boulevard, the route turns west for approximately 0.4 mile through forested lands and an industrial parcel and crosses Hornbaker Road before terminating at the proposed Hornbaker Switching Station.

Hourglass-Hornbaker Route 1 (Hybrid) is approximately 1.3 miles long (0.5 mile overhead and 0.8 mile underground) and requires approximately 17.1 acres of right-of-way, including 14.0 acres of transmission right-of-way and 3.1 acres for the proposed transition station. Existing land use along the route and transition station consists primarily of industrial development with a small amount of forested land.

DEVLIN-PEGASUS ROUTE 1

Starting at the proposed Devlin Switching Station, Devlin–Pegasus Route 1 is an overhead route that heads generally southeast for approximately 0.3 mile, crossing Hansen Farm Road and Balls Ford Road. The route turns east/southeast for 0.5 mile, following vegetated/forested parcel boundaries before angling slightly to the east to pass south of a data center building currently under construction. The route then turns northeast for 0.1 mile to cross Buckey Timber Drive and then heads southeast for 0.4 mile, passing between industrial buildings and crossing Virginia Meadows Drive and Dawkins Branch. The route then turns south, paralleling the east side of Dawkins Branch for approximately 0.2 mile before turning southeast for approximately 0.8 mile. This segment crosses Lexington Valley Drive and Sudley Manor Drive, passing between residential areas east of Lexington Valley Drive. After crossing an existing natural gas pipeline near MP 2.1, the route turns northeast for approximately 0.1 mile and then southeast for approximately 0.2 mile before terminating at the proposed Pegasus Switching Station.

Devlin-Pegasus Route 1 is approximately 2.4 miles long and requires approximately 28.6 acres of right-of-way. Existing land use along the route largely consists of a mix of forested and industrial lands and a small amount of residential development.

DEVLIN-PEGASUS ROUTE 2

Devlin–Pegasus Route 2 is an overhead route that begins at the proposed Devlin Switching Station and follows the same alignment as Devlin–Pegasus Route 1 for the first 1.2 miles, diverging just east of Dawkins Branch. At this point, Devlin–Pegasus Route 2 turns north-

northeast, passing through forested land and paralleling the west side of Dawkins Branch for approximately 0.2 mile before turning east for approximately 0.2 mile, collocating with the south side of Wellington Road. The route then crosses Lexington Valley Drive and continues southeast, paralleling the north side of Wellington Road for approximately 0.5 mile. Just before Sudley Manor Drive, the route turns southwest and crosses back over Wellington Road, paralleling the north side of Sudley Manor Drive for approximately 0.2 mile. At this point the route turns southeast and follows the same alignment as Devlin–Pegasus Route 1 for the remaining 0.6 mile to the proposed Pegasus Switching Station.

Devlin-Pegasus Route 2 is approximately 2.8 miles long and requires approximately 33.4 acres of right-of-way. Existing current land use along the route largely consists of a mix of forested and industrial lands and a small amount of residential development.

DESKTOP EVALUATION METHODOLOGY

The area of effect considered for this study consists of the proposed rights-of-way identified above within which the electric transmission lines would be constructed and operated. Data sources used for this review include the following, each of which is described briefly below:

- Recent aerial imagery, taken in October of 2023 (NAIP 2023);
- Color infrared imagery from 2010 through 2022 (NAIP 2024):
- Prince William County Geospatial Technology Services (Prince William County 2024);
- Google Earth Aerial Imagery (Google LLC 2024);
- Prince William County GIS Data Portal 2-Foot contour intervals (Prince William County, 2018)
- National Wetland Inventory (NWI) maps from the United States Fish and Wildlife Service (USFWS) online data mapping portal (USFWS 2024);
- The National Hydrography Dataset (NHD) Plus High Resolution (USGS 2024); and
- Soil Survey Geographic Database soils data from the U.S. Department of Agriculture-Natural Resources Conservation Service (USDA-NRCS 2024).

NATURAL COLOR AND INFRARED AERIAL PHOTOGRAPHY

Recent (2023) natural color aerial photography was used to provide a visual overview of the Project area and to assist in evaluating current conditions. Infrared aerial photography was used to identify the potential presence of wetlands based on signatures associated with the levels of reflectance. For example, areas that are inundated with water appear very dark (almost black) due to the low level of reflectance in the infrared spectrum. The presence of these dark colors can be used as a potential indicator of hydric or inundated soils that are likely associated with wetlands.

TOPOGRAPHIC MAPS

Recent ESRI world topographic maps show the topography of the area as well as other important landscape features such as forest cover, development, buildings, agricultural areas, streams, lakes, and wetlands (USGS 2024; ESRI et al., 2024).

USFWS NATIONAL WETLAND INVENTORY MAPPING

NWI maps provide the boundaries and classifications of potential wetland areas as mapped by the USFWS (USFWS 2024). NWI data is based primarily on aerial photo interpretations with limited ground-truthing and may represent incorrect boundaries or wetland cover types. NWI data can be unreliable in some areas, especially in forested landscapes, where aerial photography is used as the major data source. The classifications of the majority of the NWI polygons in the study area appear to be accurate based on a review of the cover types observed in the aerial photography. However, in areas where there was an obvious discrepancy between the NWI classification and the aerial photography, ERM modified the classification to more accurately reflect current conditions. In order to acknowledge ERM's adjustment of NWI classifications where appropriate, all the wetland types referenced in this assessment are referred to as "assigned wetland cover types" regardless of whether the cover type was modified from the NWI classification.

USDA-NRCS SOILS DATA

Soils in the study area were identified and assessed using the Soil Survey Geographic Database (SSURGO), which is a digital version of the original county soil surveys (USDA-NRCS 2024). The attribute data within the SSURGO database provides the proportionate extent of the component soils and their properties (e.g., hydric rating) for each soil map unit. The soils in the study area were grouped into three categories based on the hydric rating of the component soils within each map unit: hydric, partially hydric, and non-hydric. Hydric soils were defined as those where the major component soils, and minor components in some cases, are designated as hydric. Hydric components in these map units account for more than 80 percent of the map unit. Partially hydric soils include map units that only contain minor component soils that are designated as hydric. The partially hydric map units in the Project area contain 10 percent or less hydric soils. The remaining map units do not contain any component soils that are designated as hydric. Areas mapped as hydric or partially hydric have a higher probability of containing wetlands than areas with no hydric soils.

USGS NATIONAL HYDROGRAPHY DATASET

The National Hydrography Dataset (NHD) dataset contains features such as lakes, ponds, streams, rivers, and canals (USGS 2024). The waterbodies mapped by the NHD appeared generally consistent with those visible on the USGS maps and aerial photography.

PROBABILITY ANALYSIS

ERM used a stepwise process to identify probable wetland areas along the proposed routes, as follows:

- Infrared and natural color aerial photography was used in conjunction with topographic maps and soils maps to identify potential wetland areas. Boundaries were assigned to the areas that appeared to exhibit wetland signatures based on this review and a cover type was determined based on aerial photo interpretation. For the purpose of the study, these areas are referred to as Interpreted Wetlands.
- To further determine the probability of a wetland occurring within a given location, the Interpreted Wetland polygon shape files were digitally layered with the NWI mapping and soils information from the SSURGO database.
- The probability of a wetland occurring was assigned based on the number of overlapping data layers (i.e., indicators of potential wetland presence) that occurred in a particular area.

The criteria assigned to each probability are outlined in Table 2.

TABLE 2: CRITERIA USED TO RANK THE PROBABILITY OF WETLAND OCCURRENCE

Probability	Criteria
High	Areas where layers of hydric soils, Interpreted Wetlands, and NWI data overlap
Medium/High	NWI data overlaps hydric soils; or NWI data overlaps Interpreted Wetlands with or without partially hydric soils; or Hydric soils overlap Interpreted Wetlands
Medium	Interpreted Wetlands with or without overlap by partially hydric soils
Medium/Low	Hydric soils only; or NWI data with or without overlap by partially hydric soils
Low	Partially hydric soils only
Very Low	Non-hydric soils only

WETLAND AND WATERBODY CROSSINGS

The desktop analysis provides a probability of wetland and waterbody occurrence within each route, with wetlands classified based on the Cowardin classification system described below:

- Palustrine emergent (PEM) wetlands — characterized by erect, rooted, herbaceous hydrophytes (i.e., aquatic plants) and woody species less than 3 feet in height, excluding mosses and lichens;

- Palustrine scrub-shrub (PSS) wetlands — characterized by woody vegetation, excluding woody vines, approximately 3 to 20 feet in height;
- Palustrine forested (PFO) wetlands —characterized by woody vegetation, excluding woody vines, approximately 20 feet or more in height and 3 inches or larger diameter at breast height (DBH);
- Palustrine unconsolidated bottom (PUB) open waters — characterized by bottom substrate particles smaller than stones (less than 10 inches in diameter) covering greater than 25% of the area, with plants covering less than 30% of the area; and
- Riverine streams — channels containing periodically or continuously moving water (USFWS 2013).

As stated above, field delineations were not performed and would be required to verify the accuracy and extent of aquatic resource boundaries. A range of wetland occurrence probabilities are reported by this study from very low to high. The probability of wetland occurrence increases as multiple indicators begin to overlap towards the “high” end of the spectrum. The medium, medium-high, and high probability categories are the most reliable representation of in-situ conditions, due to overlapping data sets, and these categories are reported in the summary below as a percentage of the total acreage of each route. Attachment 2 depicts the Cowardin classification of aquatic resources displayed on color-based images. Attachment 3 depicts probability, and the type of interpreted wetlands displayed on color base map images.

RESULTS

Results of the probability analysis are presented in Table 3 below. Summaries are provided in the sections following the table.

TABLE 3: SUMMARY OF THE PROBABILITIES OF WETLAND AND WATERBODY OCCURRENCE ALONG THE ROUTE ALTERNATIVES

Probability	Total Within Right-of-way (acres)[b]	Wetland and Waterbody type (acres)				
		PEM (Emergent)	PFO (Forested)	PSS (Scrub-Shrub)	PUB (Freshwater pond)	Riverine (Stream)
Wellington-Pegasus Route 1						
High	NA	NA	NA	NA	NA	NA
Medium/High	<0.1	0.0	NA	NA	NA	NA
Medium	<0.1	0.0	NA	NA	NA	NA

Probability	Total Within Right-of-way (acres)[b]	Wetland and Waterbody type (acres)				
		PEM (Emergent)	PFO (Forested)	PSS (Scrub-Shrub)	PUB (Freshwater pond)	Riverine (Stream)
Medium/Low	<0.1	NA	<0.1	NA	NA	NA
Low	NA	NA	NA	NA	NA	NA
Very Low	NA	NA	NA	NA	NA	NA
Pegasus-Hornbaker Route 1 [a]						
High	0.0	NA	NA	NA	NA	0.0
Medium/High	0.7	<0.1	0.1	NA	0.5	0.1
Medium	0.4	0.1	0.3	NA	NA	0.1
Medium/Low	0.8	NA	<0.1	NA	0.3	0.4
Low	NA	NA	NA	NA	NA	NA
Very Low	NA	NA	NA	NA	NA	NA
Hourglass-Hornbaker Route 1 (Hybrid) [b]						
High	0.4	NA	0.4	NA	NA	NA
Medium/High	0.7	NA	0.6	NA	0.1	<0.1
Medium	NA	NA	NA	NA	NA	NA
Medium/Low	NA	NA	NA	NA	NA	NA
Low	NA	NA	NA	NA	NA	NA
Very Low	NA	NA	NA	NA	NA	NA
Devlin-Pegasus Route 1						
High	1.0	0.1	0.9	NA	NA	<0.1
Medium/High	3.0	0.3	2.4	NA	<0.1	0.3
Medium	2.4	0.2	1.4	NA	0.6	0.2
Medium/Low	1.0	0.1	0.5	NA	<0.1	0.3
Low	NA	NA	NA	NA	NA	NA
Very Low	NA	NA	NA	NA	NA	NA
Devlin-Pegasus Route 2						

Probability	Total Within Right-of-way (acres)[b]	Wetland and Waterbody type (acres)				
		PEM (Emergent)	PFO (Forested)	PSS (Scrub-Shrub)	PUB (Freshwater pond)	Riverine (Stream)
High	0.7	0.1	0.6	NA	NA	0.1
Medium/High	3.2	0.3	2.6	NA	<0.1	0.3
Medium	1.5	0.2	0.9	NA	0.3	0.1
Medium/Low	1.1	0.1	0.5	NA	0.1	0.4
Low	NA	NA	NA	NA	NA	NA
Very Low	NA	NA	NA	NA	NA	NA

NA = Not applicable due to absence of wetland or waterbody type within the alternative route

a The Pegasus Hornbaker is inclusive of the proposed 2.3-acre Hornbaker Switching Station.

b The Hourglass–Hornbaker includes the 3.1-acre transition station.

Wetland acreages have been rounded to the tenths place; as a result, the totals may not reflect the sum. A value of 0.0 indicates less than 0.05 acre of the wetland is present.

WETLAND CROSSINGS

Wetlands in the study area are predominantly forested associated with riverine features and flow to the south of the study area with a hydrologic connection to Dawkins Branch, Cannon Branch, and Broad Run. Riverine (stream) and PUB (open water features) are described in the Waterbody Crossings section below.

WELLINGTON-PEGASUS ROUTE 1

The length of the corridor for Wellington-Pegasus Route 1 is approximately 0.6 miles and encompasses a total of approximately 7.2 acres. Based on the methodology discussed above, the right-of-way footprint will encompass approximately 1.4 percent (less than 0.1 acres) of land with a medium or higher probability of containing wetlands and waterbodies, all of which are PEM wetlands.

PEGASUS-HORNBAKER ROUTE 1

The length of the corridor for Pegasus-Hornbaker Route 1 is approximately 1.9 miles and encompasses a total of approximately 24.8 acres, including approximately 22.5 acres for transmission right-of-way and 2.3 acres for the proposed Hornbaker Switching Station. Based on the methodology discussed above, the right-of-way footprint will encompass approximately 4.4 percent (1.1 acres) of land with a medium or higher probability of containing wetlands and waterbodies. The 1.1 acres consist of 0.4 acre of PFO wetlands, 0.1 acre of PEM wetlands, 0.5 acre of PUB open water features, and 0.2 acre of riverine features

HOURGLASS-HORNBAKER ROUTE 1 (HYBRID)

The length of the corridor for Hourglass-Hornbaker Hybrid Route 1 is approximately 1.3 miles (0.5 mile overhead and 0.8 mile underground) and encompasses a total of approximately 17.1 acres (including the 3.1-acre proposed transition station footprint). Based on the methodology discussed above, the right-of-way footprint will encompass approximately 4.1 percent (0.7 acre) of land with a medium or higher probability of containing wetlands and waterbodies. The 0.7-acre consists of 0.6 acre of PFO wetlands, 0.1 acre of PUB open water features, and less than 0.1 acre of riverine features.

DEVLIN-PEGASUS ROUTE 1

The length of the corridor for this Devlin-Pegasus Route 1 is approximately 2.4 miles and encompasses a total of approximately 28.6 acres. Based on the methodology discussed above, the right-of-way footprint will encompass approximately 22.0 percent (6.3 acres) of land with a medium or higher probability of containing wetlands and waterbodies. The 6.3 acres consists of 4.7 acres of PFO wetlands, 0.5 acre of PEM wetlands, 0.7 acre of PUB open water features, and 0.5 acre of riverine features.

DEVLIN-PEGASUS ROUTE 2

The length of the corridor for Devlin-Pegasus Route 2 is approximately 2.8 miles and encompasses a total of approximately 33.4 acres. Based on the methodology discussed above, the right-of-way footprint will encompass approximately 15.9 percent (5.3 acres) of land with a medium or higher probability of containing wetlands and waterbodies. The 5.3 acres consists of 4.1 acres of PFO wetlands, 0.5 acre of PEM wetlands, 0.3 acre of PUB open water features, and 0.5 acre of riverine features.

SOLUTIONS

As discussed in the introductory paragraphs, the routes can be combined into two electrical solutions, each of which would serve the Project need. Within each solution, the Company identified two options (each a grouping of three route alternatives) as follows:

- Solution 1A – Wellington–Pegasus Route 1, Pegasus–Hornbaker Route 1, and Devlin–Pegasus Route 1
- Solution 1B – Wellington–Pegasus Route 1, Pegasus–Hornbaker Route 1, and Devlin–Pegasus Route 2
- Solution 2A – Hourglass-Hornbaker Route 1 (Hybrid), Pegasus–Hornbaker Route 1, and Devlin–Pegasus Route 1
- Solution 2B – Hourglass-Hornbaker Route 1 (Hybrid), Pegasus–Hornbaker Route 1, and Devlin–Pegasus Route 2

As the Project will be submitted to the SCC and include the four solutions above, the total acreage of medium, medium-high, and high probability wetland and waterbody occurrence within footprints of the solutions are provided below.

TABLE 4: ACRES OF MEDIUM OR HIGHER PROBABILITY WETLAND AND WATERBODY OCCURRENCE ALONG THE SOLUTIONS

Wetland or Waterbody Type	Unit	Solution 1A	Solution 1B	Solution 2A	Solution 2B
Wetlands Affected (total)	acres miles	7.4 0.5	6.4 0.4	8.0 0.5	7.1 0.4
Palustrine Forested	acres	5.0	4.4	5.7	5.0
Palustrine Scrub-Shrub	acres	NA	NA	NA	NA
Palustrine Emergent	acres	0.6	0.6	0.6	0.6
Palustrine Unconsolidated Bottom	acres	1.1	0.8	1.1	0.8
Riverine (Streams)	acres	0.6	0.7	0.6	0.7

WATERBODY CROSSINGS

ERM identified and mapped waterbodies in the study area using similar publicly available GIS databases as those used to identify and map wetlands. Devlin-Pegasus Routes 1 and 2 both cross perennial Dawkins Branch. All the route alternatives except the Wellington-Pegasus Route 1 cross unnamed perennial and intermittent tributaries associated with Dawkins Branch and Broad Run as well as open waterbody features that appear to be stormwater ponds. Hourglass-Hornbaker Route 1 (Hybrid) crosses an unnamed intermittent tributary associated with Cannon Branch.

TABLE 5: WATERBODIES CROSSED BY THE ROUTES AND ROUTE VARIATIONS

Waterbodies Crossed	Units	Wellington-Pegasus Route 1	Pegasus-Hornbaker [a] Route 1	Hourglass-Hornbaker [b] Route 1 (Hybrid)	Devlin-Pegasus	
					Route 1	Route 2
Total	Number	0	4	2	16	17
Perennial Streams	Number	0	0	0	3	3
Intermittent Streams	Number	0	2	1	8	9

Perennial Lakes/Ponds	Number	0	1	1	3	3
Non-NHD Mapped Intermittent Streams [c]	Number	0	1	0	2	2

Source: NHD (USGS 2024)
a The Pegasus Hornbaker is inclusive of the proposed 2.3-acre Hornbaker Switching Station.
b The Hourglass-Hornbaker includes the 3.1-acre transition station.
c The PUB open water features and non-NHD mapped intermittent streams listed in the table were identified via recent (2023) aerial imagery during desktop analysis rather than mapped by the NHD (NAIP 2023).

WELLINGTON-PEGASUS ROUTE 1

Based on ERM's desktop wetland and waterbody analysis, there are no waterbodies identified within the Wellington-Pegasus Route 1 right-of-way.

PEGASUS-HORNBAKER ROUTE 1

The Pegasus–Hornbaker Route 1 right-of-way, inclusive of the 2.3-acre proposed Hornbaker Switching Station, crosses four waterbodies. Three are NHD-mapped waterbodies: two unnamed intermittent streams and one unnamed open waterbody feature. Based on historic aerial imagery, the NHD-mapped intermittent stream near MP 1.1 appears to be eliminated or diverted underground, therefore there is no above-ground stream crossing in this location (Google LLC 2024). Based on recent (2023) aerial imagery, the NHD-mapped intermittent stream and open waterbody feature within the footprint of the proposed Hornbaker Switching Station have been diverted around the switching station underground. There is no longer a PUB open waterbody feature, and the stream crossing within the rout right-of-way near MP 1.8 is now below-ground. As a result, no waterbodies are within the proposed switching station footprint (NAIP 2023). Additionally, one unnamed, unclassified stream associated with Broad Run was identified using recent (2023) aerial imagery near approximate MP 0.7 (NAIP 2023). Based on ERM's wetland desktop methodology, the Pegasus–Hornbaker Route 1 right-of-way would encompass approximately 0.2 acre of riverine streams and 0.5 acre of PUB open water features, however, as described above, the PUB feature has been eliminated.

HOURGLASS-HORNBAKER ROUTE 1 (HYBRID)

Hourglass-Hornbaker Route 1 (Hybrid) right-of-way would cross one NHD-mapped unnamed, intermittent stream between MPs 0.9 and 1.0. Based on ERM's desktop wetland and waterbody analysis, the right-of-way for Hourglass-Hornbaker Route 1 (Hybrid) would encompass approximately less than 0.1 acre of riverine streams. A 0.3-acre open waterbody feature is mapped by the NHD between MPs 1.2 and the proposed Hornbaker Switching Station, however, based on recent (2023) aerial imagery, the area has been developed, and the feature is no longer present.

DEVLIN-PEGASUS ROUTE 1

Devlin-Pegasus Route 1 would cross 16 waterbodies, of which 14 are NHD-mapped, including three perennial waterbodies (Dawkins Branch and two unnamed perennial streams), eight unnamed intermittent streams, and three lake/ponds. Two unnamed, unclassified streams were identified within the right-of-way using recent aerial imagery (NAIP 2023). Based on ERM's desktop wetland and waterbody analysis, the right-of-way for Route 1 would encompass approximately 0.5 acre of riverine streams and 0.7 acre of PUB open water features.

DEVLIN-PEGASUS ROUTE 2

Devlin-Pegasus Route 2 would cross 17 waterbodies, of which 15 are NHD-mapped, including three perennial waterbodies (Dawkins Branch and two unnamed perennial streams), nine unnamed intermittent streams, and three lake/ponds. Two unmapped, unclassified streams were identified within the right-of-way using recent aerial imagery (NAIP 2023). Based on ERM's desktop wetland and waterbody analysis, the right-of-way for Route 2 would encompass approximately 0.5 acre of riverine streams and 0.3 acre of PUB open water features.

SOLUTIONS

As discussed above in the Wetland Crossings section, the Company identified two electrical solutions with two options (each a grouping of three route alternatives) for each. The probabilities of waterbody crossings by solution are provided below.

TABLE 6: WATERBODIES CROSSED BY THE SOLUTIONS

Waterbodies Crossed	Units	Solution 1A	Solution 1B	Solution 2A	Solution 2B
Total	Number	20	21	22	23
Perennial Streams	Number	3	3	3	3
Intermittent Streams	Number	10	11	11	12
Perennial Lakes/Ponds	Number	4	4	5	5
Non-NHD Mapped Intermittent Streams [a]	Number	3	3	3	3

Source: NHD (USGS 2024)
a Non-NHD mapped intermittent streams listed in the table were identified via recent (2023) aerial imagery during desktop analysis rather than mapped by the NHD (NAIP 2023).

PROJECT IMPACTS

Avoiding or minimizing new impacts on wetlands and streams was among the criteria used in developing routes for the Project. To minimize impacts on wetland areas, the transmission lines have been designed to span or avoid wetlands and waterbodies where possible, keeping transmission structures outside of aquatic resources to the extent practicable. All route alternatives cross tributaries associated with Broad Run. Devlin-Pegasus Routes 1 and 2 cross Dawkins Branch and associated tributaries. Waterbodies crossed by the route alternatives would be spanned to the extent practicable, with permanent impacts to waterbodies limited to riparian buffer transition from tree cover to herbaceous vegetation within the maintained right-of-way.

The majority of potential direct impacts on wetlands due to Project construction would be temporary in nature. Mats would be used for construction equipment to travel over wetlands, as appropriate. Due to the absence of an existing right-of-way, some new access roads may be necessary along the route. If a section of line cannot be accessed from existing roads, Dominion Energy Virginia may need to install a culvert, ford, or temporary bridge along the right-of-way to cross small streams. In such cases, some temporary fill material in wetlands adjacent to such crossings may be required. This fill would be placed on erosion control fabric and removed when work is completed, returning ground elevations to original contours. When siting transmission lines, perpendicular crossings of wetland systems are prioritized to minimize direct impacts to these sensitive areas and reduce overall impacts to the watershed.

Permanent direct impacts to wetlands would be limited to placement of structures within wetlands, if unavoidable, and, due to the necessity of removing trees and shrubby vegetation from the right-of-way, the permanent conversion of PSS/PFO wetlands to PEM type wetlands.

No change in contours of wetlands and waterbodies, or redirection of the flow of water, is anticipated and the amount of spoil from foundation and structure placement would be minimal. Excess spoil in wetlands generated through foundation construction would be controlled through construction best management practices (e.g., the implementation erosion and sediment controls).

Required tree removal adjacent to waterbodies would reduce riparian buffer functions such as stream bank stabilization and erosion control, nutrient and sediment filtration, floodwater storage and peak flow reduction, habitat diversity, and water temperature modification from shading. Where the removal of trees or shrubby vegetation occurs within wetlands, Dominion Energy Virginia would use the least intrusive method reasonably possible to clear the corridor. Within the stream buffers (100 feet), trees and vegetation will be hand felled and stumps left in place to reduce the potential for erosion. Shrubs and trees with a diameter at breast height of less than three inches will be left in place unless it impedes temporary access where they would be clipped, leaving roots in place which will be able to naturally regenerate. Vegetation within the right-of-way would be allowed to return to maintained grasses and shrubs after

construction, which would provide some filtration stabilization to help protect waterbodies from pollutants.

SUMMARY

This Wetland and Waterbody Summary report was prepared in accordance with the Memorandum of Agreement between the DEQ and the SCC for the purpose of initiating a Wetlands Impact Consultation. Please note that a formal onsite wetland delineation was not conducted as part of this review.

In addition, there is a Project website where the SCC application will be available after filing, as well as maps and discussions about the Project. It can be accessed by going to: https://www.dominionenergy.com/projects-and-facilities/electric-projects/power-line-projects/hornbakerdevlin.

If you have any questions regarding this wetland assessment, please contact me at 857-302-6502 or by email at jake.bartha@erm.com.

Sincerely,

Jake Bartha
Environmental Resources Management

cc: James Young, Dominion Energy Virginia

Enclosures: Attachments 1, 2, and 3

REFERENCES

Environmental Laboratory. 1987. Technical Report Y-87-1: Corps of Engineers Wetlands Delineation Manual US Army Corps of Engineers, Waterways Experiment Station. January 1987.

ESRI, Airbus, USGS, NGA, NASA, CGIAR, NLS, OS, NMA, Geodatastyrelsen, GSA, GSI and the GIS User Community. 2024. World Elevation Terrain. Accessed November 2024. https://elevation.arcgis.com/arcgis/rest/services/WorldElevation/Terrain/ImageServer.

Google Earth LLC. 2024. Google Earth Pro, Version 7.3.6.9796 (64-bit). Historic Aerial Imagery in Virginia, United States. Accessed November 2024.

NAIP (National Agricultural Imagery Program). 2023. Aerial imagery flown over Prince William County, Virginia October 11, 2023. Accessed November 2024. https://naip-usdaonline.hub.arcgis.com/.

National Agricultural Imagery Program (NAIP). 2024. USA NAIP Imagery: Natural Color. Available online at: https://naip-usdaonline.hub.arcgis.com/. Accessed November 2024.

National Agricultural Imagery Program (NAIP). 2024a. USA NAIP Imagery: Color Infrared. Available online at: https://naip-usdaonline.hub.arcgis.com/. Accessed November 2024.

Prince William County Geospatial Technology Services. 2024a. County Mapper. Accessed September 2024. Available online: https://gisweb.pwcva.gov/webapps/countymapper/

Prince William County GIS Data Portal. 2-Foot Contour Interval – Contours Western. 2018. Accessed September 2024: https://gisdata-pwcgov.opendata.arcgis.com/datasets/PWCGOV::contours-western.

USDA-NRCS (U.S. Department of Agriculture—Natural Resources Conservation Service). Soil Survey Geographic Data (SSURGO). 2024. Accessed October 2024. https://www.nrcs.usda.gov/resources/data-and-reports/soil-survey-geographic-database-ssurgo.

USFWS (U.S. Fish and Wildlife Service). 2013. *Classification of Wetlands and Deepwater Habitats of the United States*. Available online at: https://www.fws.gov/program/national-wetlands-inventory/classification-codes. Accessed July 2024.

USFWS. 2024. *National Wetlands Inventory*. Accessed September 2024. http://www.fws.gov/wetlands/.

USGS (U.S. Geological Survey). 2024. *The National Hydrography Dataset Plus High Resolution*. Accessed: July 2024. Retrieved from: https://hydro.nationalmap.gov/arcgis/rest/services/nhd/MapServer.

ATTACHMENT 1

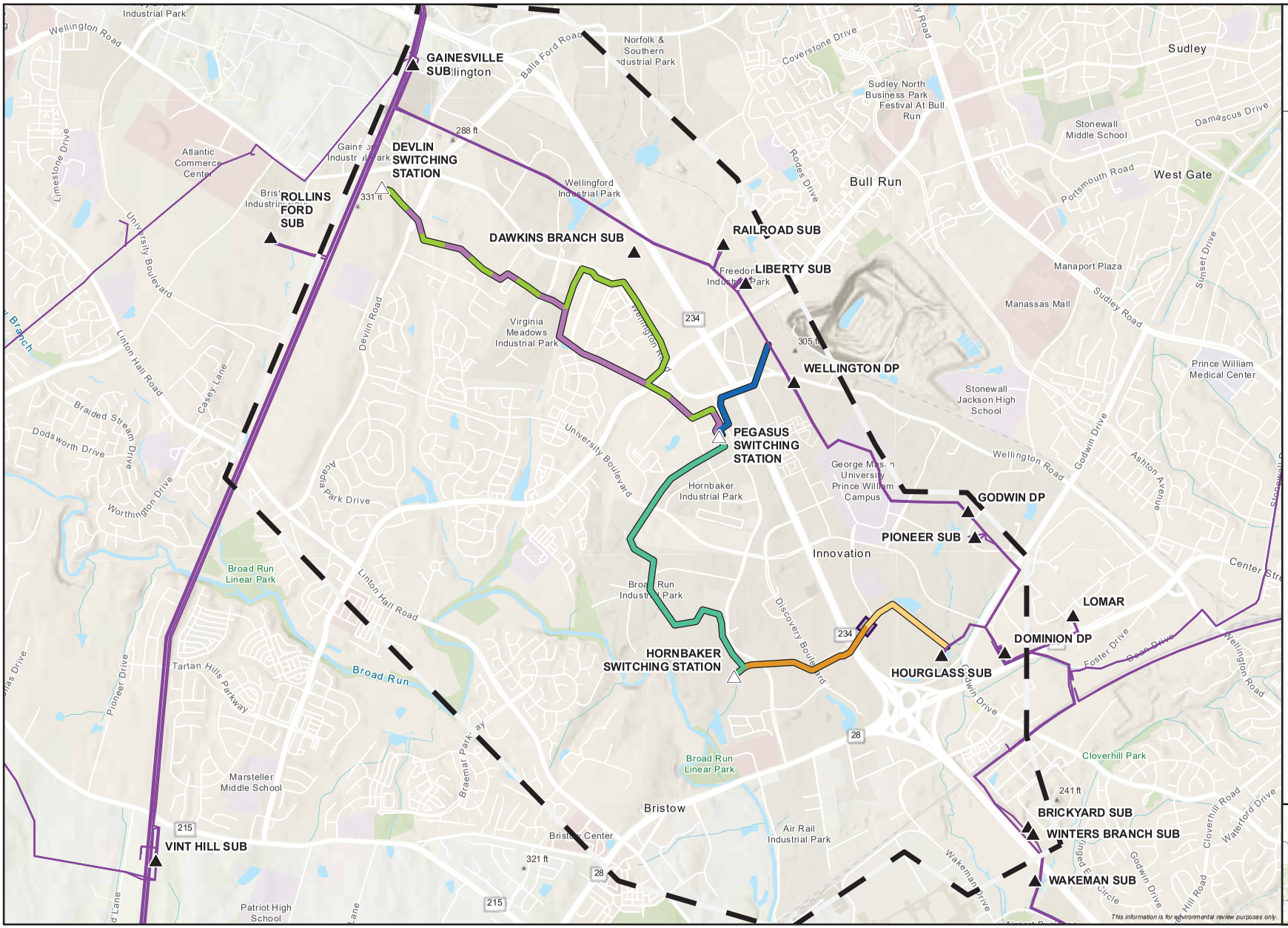

Dominion Energy

Attachment 1
Project Overview Map

Hornbaker 230 kV Line Loop Project
Dominion Energy
Prince William County, Virginia

- Existing Substation
- Proposed Switching Station
- Existing Dominion Transmission Line
- Wellington – Pegasus Route 1
- Pegasus – Hornbaker Route 1
- Hourglass – Hornbaker Route 1 (Overhead)
- Hourglass – Hornbaker Route 1 (Underground)
- Proposed Transition Station
- Devlin – Pegasus Route 1
- Devlin – Pegasus Route 2
- Study Area

0 1,250 2,500
Feet

1:30,000

ERM

N W E S

222 South 9th Street
Suite 2900
Minneapolis, Minnesota 55402

T +0 804 253 1090
F +0 804 253 1091

erm.com

ATTACHMENT 2